THIS DRAWING IS UNPUBLISHED. RELEASED FOR PUBLICATION 20
© COPYRIGHT 20 BY TYCO ELECTRONICS CORPORATION. ALL RIGHTS RESERVED.

SET UP GAUGE 2119599-1	LOC	DIST
	A	66

REVISIONS

P	LTR	DESCRIPTION	DATE	DWN	APVD
	A2	ECR-15-005520	08APR2015	MR	TE

ATLANTIC VERSION TERMINATOR INTERFACE ADAPTER

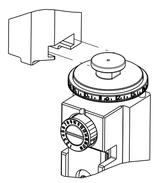

PART NUMBER	REVISION	DESCRIPTION	FEED TYPE
2266120-1	A	FINE CRIMP HEIGHT ADJUST	MECHANICAL
2266120-2	A	FINE CRIMP HEIGHT ADJUST	PNEUMATIC
2266120-5	A	FINE CRIMP HEIGHT ADJUST	SERVO LATCH PLATE △4
2266120-6	A	NON-CRIMP HEIGHT ADJUST	SERVO △4 LATCH PLATE △12
2266120-7	A	FINE CRIMP HEIGHT ADJUST	NONE
7-2266120-7	A	CRIMP TOOLING KIT	-
7-2266120-8	A	APPLICATOR CONVERSION KIT	- △4

APPLICATOR STYLE CONVERSION CHART

CONVERT TO	PART NUMBERS REQUIRED					
PNEUMATIC FEED	2119950-1	1338685-1	5-18022-5	2119641-1	2119799-1	2063440-1
SERVO LATCH PLATE	2119951-1	-	8-2266120-5	1901094-3	-	2168400-6 (QUANTITY 2)
SMART APPLICATOR	2161326-1	-	8-2266120-4	-	-	-
MECHANICAL FEED	2119949-1	1338685-1	5-18022-5	2119653-1	-	-
SERVO LATCH PLATE	2119951-1	-	8-2266120-5	1901094-3	-	2168400-6 (QUANTITY 2)
SMART APPLICATOR	2161326-1	-	8-2266120-4	-	-	-
MECHANICAL FEED	2119949-1	1338685-1	5-18022-5	2119653-1	-	-
PNEUMATIC FEED	2119950-1	1338685-1	5-18022-5	2119641-1	2119799-1	2063440-1
-	-	-	-	-	-	-
-	-	-	-	-	-	-
-	-	-	-	-	-	-
-	-	-	-	-	-	-

APPLICATOR DATA

CRIMP	SIZE	TYPE
WIRE	1.75 mm [.069]	F
INSUL	1.32 mm [.052]	O

APPLICATOR INSTRUCTIONS 408-10389

△13 APPLICATOR CONVERSION KITS

PART NUMBER	INSULATION DIAMETER RANGE
7-2266116-8	∅2.67-3.18mm [.105-.125]
7-2266117-8	∅2.16-2.82mm [.085-.111]
7-2266118-8	∅1.91-2.67mm [.075-.105]
7-2266119-8	∅1.62-2.16mm [.064-.085]
7-2266120-8	∅1.27-1.91mm [.050-.075]

TERMINAL DATA: DEUTSCH TERMINAL DEUTSCH CRIMP SPECIFICATION

TERMINAL NAME: STAMPED CONTACT PIN SIZE 20

WIRE STRIP LENGTH	INSULATION DIAMETER RANGE
3.81-5.09 mm [.150-.200 IN]	∅1.27-1.91 mm [.050-.075 IN]
TERMINAL APPLICATION SPECIFICATION 0425-059-0000 Rev L	- -
-	- -

TERMINALS APPLIED

TE TERMINAL	DEUTSCH TERMINAL	TE TERMINAL	DEUTSCH TERMINAL
1572032-3	1060-20-0222	1572032-4	1060-20-0244
1572032-8	1060-20-0277		

TERMINAL DATA: DEUTSCH TERMINAL DEUTSCH CRIMP SPECIFICATION

TERMINAL NAME: STAMPED CONTACT SOCKET SIZE 20

WIRE STRIP LENGTH	INSULATION DIAMETER RANGE
3.81-5.09 mm [.150-.200 IN]	∅1.27-1.91 mm [.050-.075 IN]
TERMINAL APPLICATION SPECIFICATION 0425-059-0000 Rev L	- -
-	- -

TERMINALS APPLIED

TE TERMINAL	DEUTSCH TERMINAL	TE TERMINAL	DEUTSCH TERMINAL
286680-3	1062-20-0222	286680-4	1062-20-0244
1-286680-1	1062-20-0277		

WIRE SIZE	CRIMP HEIGHT mm [INCH]	CRIMP HEIGHT REFERENCE SETTING △9
1.00mm2	1.27+0.03/-0.05 [.050+.001/-.002]	5.4
18 AWG	1.24+0.03/-0.05 [.049+.001/-.002]	5.7
0.75mm2	1.22+0.03/-0.05 [.048+.001/-.002]	5.9
0.60mm2	1.07+0.03/-0.05 [.042+.001/-.002]	7.4
20 AWG	0.99+0.03/-0.05 [.039+.001/-.002]	8.2
0.50mm2	0.97+0.03/-0.05 [.038+.001/-.002]	8.4
22 AWG	0.94+0.03/-0.05 [.037+.001/-.002]	8.7
0.35mm2	0.94+0.03/-0.05 [.037+.001/-.002]	8.7

*WARNING
ON INSTALLATION, SET WIRE DISC, ITEM 40 TO LARGEST WIRE SIZE SETTING. USE OF SETTINGS BELOW MINIMUM REQUIRED CRIMP HEIGHT SETTING WILL CAUSE DAMAGE TO CRIMP TOOLING.

△1 RECOMMENDED SPARE PARTS

△2 GREASE BEARING SURFACES LIGHTLY

3. LUBRICATE DAILY PER THE APPLICATOR INSTRUCTION SHEET SUPPLIED WITH THE APPLICATOR.

△4 APPLICATOR SPECIFIC DATA TO BE ENTERED INTO BLANK MEMORY CHIP AT ASSEMBLY. SEE BELOW FOR PART NUMBER:
MECHANICAL FEED WITH "SMART APPLICATOR" CONVERSION: 8-2266120-4
PNEUMATIC FEED WITH "SMART APPLICATOR" CONVERSION: 8-2266120-4
SERVO FEED WITH "FINE CRIMP HEIGHT ADJUST": 8-2266120-5
SERVO FEED WITH "NON-CRIMP HEIGHT ADJUST": 8-2266120-6

5. ADJUSTMENT OF THE STRIPPER MAY BE REQUIRED WHEN MOVING THE APPLICATOR BETWEEN BENCH AND LEADMAKER APPLICATIONS.

△6 APPLY PART NUMBER 1-23419-5 LOCTITE TO THREADS OF ITEMS 62.
APPLY PART NUMBER 2-23419-6 LOCTITE TO THREADS OF ITEMS 242.
FOR -6 ONLY APPLY PART NUMBER 1-23419-5 LOCTITE TO THREADS OF ITEM 37.

△7 GREASE THREADS, GROOVE AND O-RING ON ITEMS 35 & 252.

△8 MAGNET, ITEM 166 MUST BE ORIENTED CORRECTLY IN ORDER TO PROPERLY ACTUATE THE COUNTER.

△9 CRIMP HEIGHT REFERENCE SETTING WAS THE SETTING USED WHEN THE APPLICATOR WAS QUALIFIED AT THE FACTORY. ADJUSTMENT MAY BE NECESSARY WHEN RUNNING APPLICATOR IN THE FIELD.

△10 SPARE FEED CAM STORAGE LOCATION REFER TO INSTRUCTION SHEET FOR ADDITIONAL INFORMATION.

△11 TO CONVERT THE APPLICATOR TO A NON-CARRIER CUTTING STYLE, REMOVE ITEM 13 AND ATTACH TO THE LOCATION ON THE BACK SIDE OF THE HOUSING. REFER TO INSTRUCTION SHEET FOR ADDITIONAL INFORMATION.

△12 WHEN ASSEMBLING A NON CRIMP HEIGHT ADJUST APPLICATOR (-6) USE SHIMS FROM ITEM 260 TO ACHIEVE A NOMINAL SHIM HEIGHT OF 4.53.

△13 SEE APPROPRIATE APPLICATOR LOG SHEETS FOR APPLIED TERMINALS, WIRE RANGE AND MEMORY CHIP.

-78	-77	-7	-6	-5	-2	-1	PART NO	DESCRIPTION	ITEM NO
-	-	-	1	-	-	-	2119957-2	APPLICATOR SHIM PACK	260
-	-	1	-	1	1	1	8-21084-0	O-RING, .676 ID, .070 DIA. MAT.	△7 252
-	-	-	-	-	1	-	2119640-1	PUSH ROD, AIR FEED	250
-	-	-	-	-	1	-	2079988-1	BUSHING, LCH5-12, MISUMI	249
-	-	-	-	-	1	-	2119641-1	FEED CAM, AIR FEED	248
-	-	1	-	1	1	1	2119798-1	DETENT PIN	247
-	-	1	-	1	1	1	1-22279-3	SPRING, COMPRESSION	246
-78	-77	-7	-6	-5	-2	-1	PART NO	DESCRIPTION	ITEM NO

-78	-77	-7	-6	-5	-2	-1	PART NO	DESCRIPTION	ITEM NO
-	-	-	1	-	-	-	2119758-1	RAM, AMP STYLE, SIDE FEED, NON-ADJ.	245
-	-	1	1	1	1	1	2119082-9	CAM, SNAIL, INSULATION ADJUSTMENT	244
-	-	1	1	1	1	1	2079764-1	WASHER, WAVE SPRING, CREST-TO-CREST	243
-	-	1	1	1	1	1	2119083-1	RETAINER, INSULATION DIAL	△6 242
-	-	1	1	1	1	1	7-18023-7	SCR, SKT HD CAP M3 X 4.0	241
-	-	-	2	2	-	-	2168400-6	SHCS, LOW HEAD, RoHS, M5 X 16	240
-	-	-	-	-	-	1	2119580-1	MECHANICAL FEED ASSEMBLY	239
-	-	-	-	-	1	-	2063440-1	AIR FEED MODULE	238
-	-	-	1	1	-	-	2119740-2	TAG,IDENTIFICATION	213
-	-	-	1	1	-	-	1901094-3	SPACER, FEEDER	198
-	-	-	-	-	2	-	21045-3	RING, RETAIN, EXTERN, 3/16 CRESCENT	172
-	-	1	1	1	1	1	994969-1	MAGNET, RARE EARTH HIGH ENERGY	△8 166
-	-	REF	REF	REF	REF	REF	994970-2	COUNTER, MAGNETIC	164
-	-	-	-	-	1	-	240638-1	SPRING, FEED FINGER	163
-	-	-	-	-	1	-	3-23627-7	PIN, RETAIN, GRVD, 3/16 X .854	137
-	-	-	-	-	1	-	2119799-1	HOLDER,FEED FINGER, AF	136
-	-	-	REF	REF	-	-	SEE NOTE 4	MEMORY CHIP, PROGRAMMED	135
-	-	-	1	1	-	-	1633743-1	SERVO FEED LATCH ASM	133
-	-	1	1	1	1	1	1-18028-2	WASHER, FLAT, REG M4	119
-	-	-	REF	REF	-	-	2119944-1	FEED FINGER ASSEMBLY,SF	117
-	-	1	1	1	1	1	455888-7	SPACER, CRIMPER	82
-	-	1	1	1	1	1	22278-8	SPRING, COMPRESSION	77
-	-	1	1	1	1	1	854769-4	HOLDER, INS	74
1	-	-	-	-	-	-	2266120	PRINT, APPLICATOR LOG SHEET	72
-	-	1	1	1	1	1	2119956-1	DOCUMENTATION PACKAGE	71
-	-	1	1	1	1	1	2119791-9	DEPRESSOR, WIRE	70
-	-	1	-	-	1	1	2119740-1	TAG,IDENTIFICATION	67
-	-	2	2	2	2	2	2168078-1	SCREW, DRIVE, RH, RoHS, 2 x .188	66
-	-	1	-	1	1	1	2119793-1	LIMITER, ADJUSTMENT BOLT	63
-	-	3	-	3	3	3	992763-5	SCR, SET, SOC, CONE POINT, M3 x 4.0	△6 62
-	-	1	1	1	1	1	2079383-4	SCR, BHSC, RoHS (M4 X 8)	60
-	-	-	-	-	1	1	5-18022-5	SCR, HEX HD CAP, M4 X 6.0	59
-	-	1	1	1	1	1	21028-2	PIN, SLOTTED SPRING .062 X .250	58
-	-	-	-	-	1	1	1338685-1	PAWL, FEED	56
-	-	4	4	4	4	4	2168400-1	SHCS, LOW HEAD, RoHS, M4 X 12	54
-	-	2	2	2	2	2	1-2168083-0	SCR, SKT HD CAP, RoHS, M4 X 10	53
-	-	1	1	1	1	1	5018030-1	NUT, HEX, REG, RoHS, M3	52
-	-	1	1	1	1	1	811242-5	BUMPER, HOLD DOWN	51
-	-	1	1	1	1	1	690753-2	SPACER, TONKER	50
-	-	-	-	-	1	2	18023-9	SCR, SKT HD CAP M4 X 6.0	49
-	-	-	-	-	-	1	2119652-1	FEED CAM, PRE FEED	48
-	-	-	-	-	-	1	2119653-1	FEED CAM, POST FEED	47
-	-	1	1	1	1	1	2119656-9	APPLICATOR BASIC ASSEMBLY, SF	46
-	-	1	-	1	1	1	2119370-1	RAM, AMP STYLE, SIDE FEED	44
-	-	1	1	1	1	1	2079383-7	SCR, BHSC, RoHS (M8 X 25)	41
-	-	1	-	1	1	1	2119645-1	DISC, NUMBERED FA WIRE ADJUSTMENT	40
-	-	1	-	1	1	1	2119957-1	APPLICATOR SHIM PACK	39
-	-	1	1	1	1	1	2119644-1	RAM WASHER, PRECISION	38
-	-	1	1	1	1	1	2119085-1	FA HEAD, ATLANTIC STYLE	△6 37
-	-	1	-	1	1	1	2119092-1	BOLT, ADJUSTMENT	△7 35
-	-	1	1	1	1	1	2-1752356-0	SUPPORT, TERMINAL	34
-	-	2	2	2	2	2	2079383-5	SCR, BHSC, RoHS (M4 X 20)	33
-	-	1	1	1	1	1	2161328-1	HEX HEAD, FLANGED, M5 x 8mm LONG	32
-	-	1	1	1	1	1	1-1320908-0	SPACER, STRIP GUIDE	30
-	-	1	1	1	1	1	2119959-1	ASSEMBLY, STRIP GUIDE	29
-	-	1	1	1	1	1	455888-3	SPACER, CRIMPER	28
-	-	1	1	1	1	1	1320928-2	STRIP GUIDE	24
-	-	1	1	1	1	1	2168083-2	SCR, SKT HD CAP, RoHS, M4 X 8.0	21
-	-	1	1	1	1	1	1-18028-2	WASHER, FLAT, REG M4	20
-	-	1	1	1	1	1	2119533-1	STRIPPER, SIDE FEED	19
-	-	1	1	1	1	1	2119806-1	INSERT, SHEAR	△1 13
-	-	1	1	1	1	1	3-22280-3	SPRING, COMPRESSION	12
-	-	1	1	1	1	1	1-356885-4	STOP, SHEAR	11
-	-	1	1	1	1	1	2119805-1	SHEAR HOLDER, FRONT	△1 10
-	-	1	1	1	1	1	1803095-1	FLOATING SHEAR, FRONT	△1 9
1	1	1	1	1	1	1	2-1803054-7	ANVIL, COMBINATION	△1 8
-	-	-	-	-	-	-	-	-	7
-	-	-	-	-	-	-	-	-	6
-	-	1	1	1	1	1	2119780-9	DEPRESSOR, SHEAR	5
-	-	1	1	1	1	1	238011-9	BLOCK, CRIMPER SPACER	4
1	1	1	1	1	1	1	1803019-8	CRIMPER, INSULATION O	△1 3
-	-	1	1	1	1	1	455888-4	SPACER, CRIMPER	2
-	1	1	1	1	1	1	4-1633713-4	CRIMPER, WIRE PREMIUM	△1 1

ATLANTIC VERSION
Shown on sheets 1 of 4 & 2 of 4
(Pacific version shown on sheets 3 of 4 & 4 of 4)

THIS DRAWING IS A CONTROLLED DOCUMENT FOR TYCO ELECTRONICS CORPORATION. IT IS SUBJECT TO CHANGE WITHOUT NOTICE. CONTACT THE ORIGINATING ORGANIZATION SHOULD BE CONTACTED FOR THE LATEST REVISION.

DIMENSIONS: mm
TOLERANCES UNLESS OTHERWISE SPECIFIED:
0 PLC ±-
1 PLC ±0.5
2 PLC ±0.13
3 PLC ±0.013
4 PLC ±0.0001
ANGLES ±-
MATERIAL -
FINISH -

DWN	R KNEPPER	17-Oct-13
CHK	G BAILEY	17-Oct-13
APVD	M CLIFFORD	17-Oct-13
PRODUCT SPEC	-	
APPLICATION SPEC	-	
WEIGHT	-	

TE Connectivity
Harrisburg, PA 17105-3608

NAME: Ocean Side Feed Applicator -

SIZE	CAGE CODE	DRAWING NO	RESTRICTED TO
A1	00779	C-2266120	-

Customer Accessible Production Drawing | SCALE 1:2 | SHEET 1 OF 4 | REV A2

SHEETS 3 & 4 ARE NOT REQUIRED FOR ATLANTIC VERSION

THIS DRAWING IS UNPUBLISHED. RELEASED FOR PUBLICATION 20
© COPYRIGHT 20 BY TYCO ELECTRONICS CORPORATION. ALL RIGHTS RESERVED.

LOC	DIST
A	66

REVISIONS

P	LTR	DESCRIPTION	DATE	DWN	APVD
	-	SEE SHEET 1	-	-	-

FEED TYPE MECHANICAL

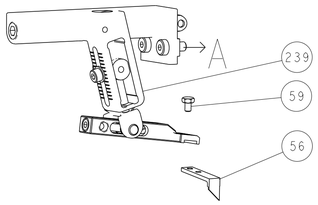

PNEUMATIC

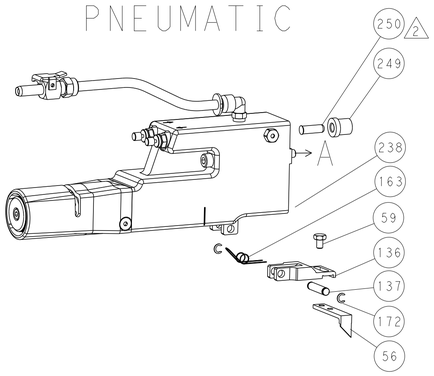

SERVO LATCH PLATE

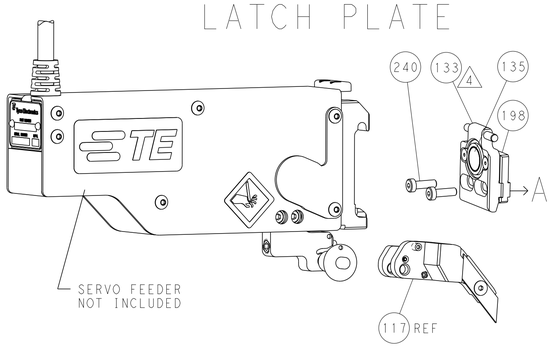

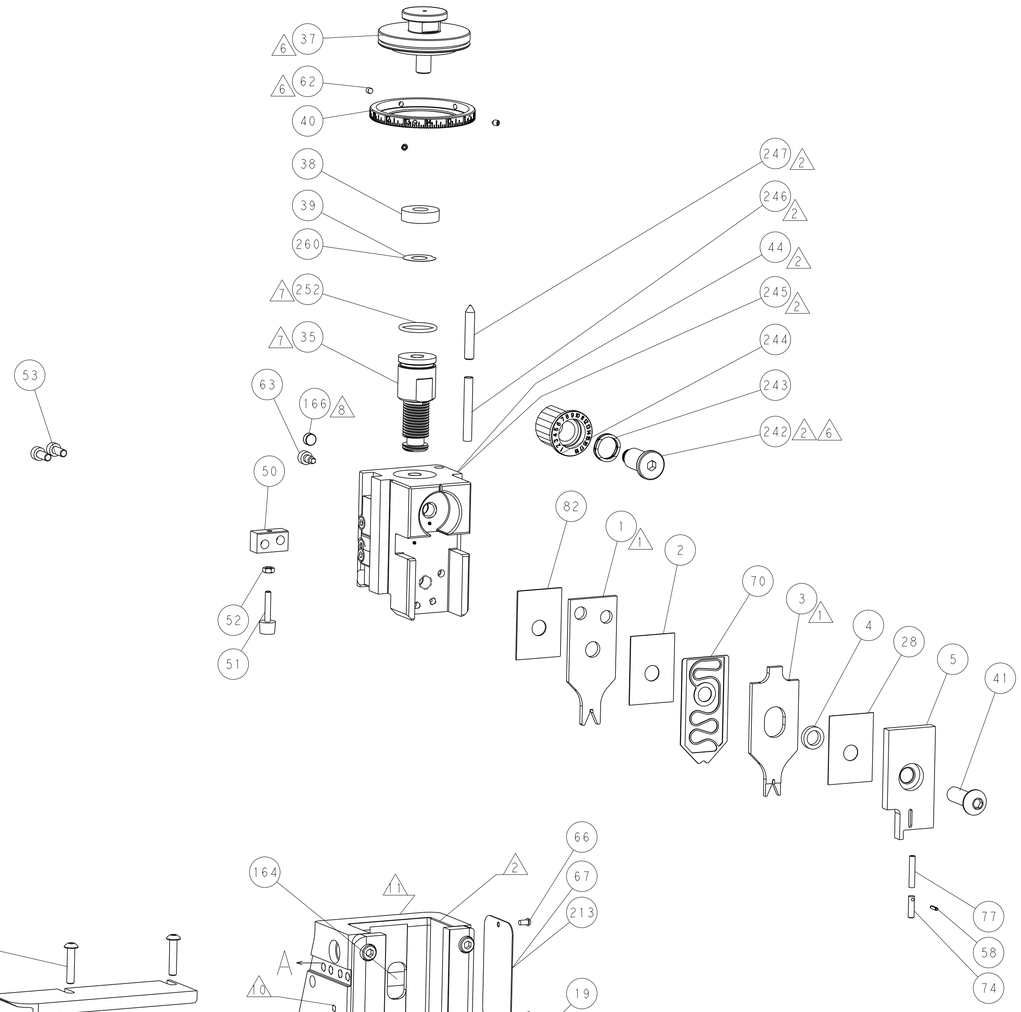

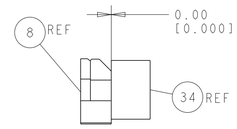

TERMINAL SUPPORT LOCATION

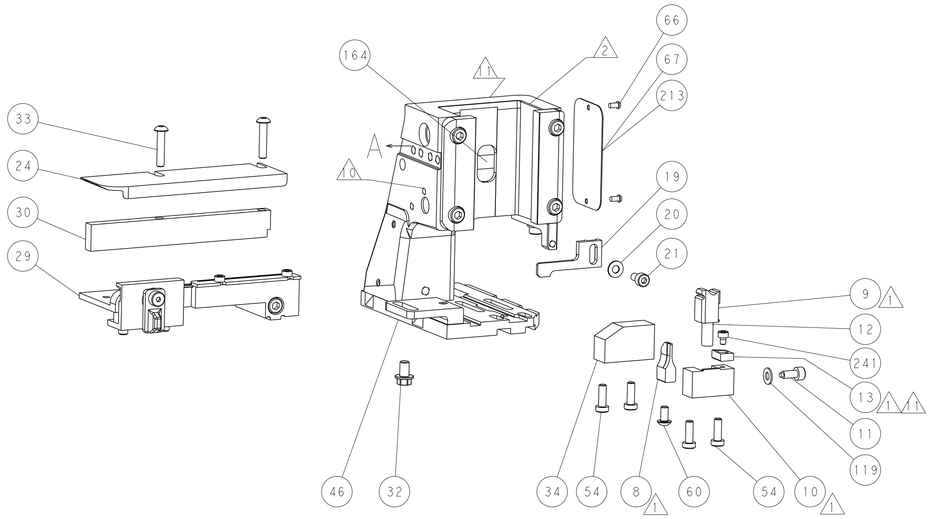

ITEM 30 LOCATED AT
FRONT HOLES

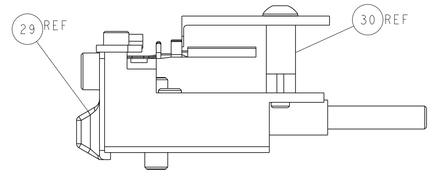

FEED TRACK POSITION
GUIDE BY WIRE BARREL

CAM POSITIONS

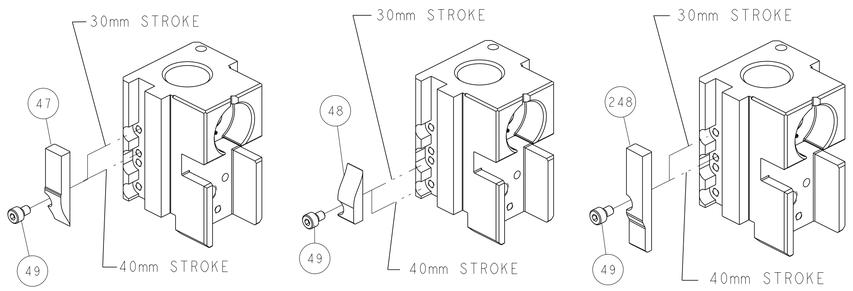

MECHANICAL POST FEED

MECHANICAL PRE FEED

AIR FEED

ATLANTIC VERSION

Shown on sheets 1 of 4 & 2 of 4
(Pacific version shown on sheets 3 of 4 & 4 of 4)

THIS DRAWING IS A CONTROLLED DOCUMENT FOR TYCO ELECTRONICS CORPORATION. IT IS SUBJECT TO CHANGE AND CONTROLLING ENGINEERING ORGANIZATION SHOULD BE CONTACTED FOR THE LATEST REVISION.

DWN	R.KNEPPER	17-Oct-13
CHK	G.BAILEY	17-Oct-13
APVD	M.CLIFFORD	17-Oct-13
PRODUCT SPEC	-	
APPLICATION SPEC	-	
WEIGHT	-	

DIMENSIONS: mm

TOLERANCES UNLESS OTHERWISE SPECIFIED:
0 PLC ±-
1 PLC ±0.5
2 PLC ±0.13
3 PLC ±0.013
4 PLC ±0.0001
ANGLES ±-

MATERIAL - -
FINISH - -

TE Connectivity
Harrisburg, PA 17105-3608

NAME: Ocean Side Feed Applicator -

SIZE	CAGE CODE	DRAWING NO	RESTRICTED TO
A1	00779	C-2266120	-

Customer Accessible Production Drawing | SCALE 1:2 | SHEET 2 OF 4 | REV A2

AMP 4805 REV 31MAR2000

SHEETS 3 & 4 ARE NOT REQUIRED FOR ATLANTIC VERSION

THIS DRAWING IS UNPUBLISHED. RELEASED FOR PUBLICATION 20
© COPYRIGHT 20 BY TYCO ELECTRONICS CORPORATION, ALL RIGHTS RESERVED.

SET UP GAUGE	LOC	DIST
2119599-1	A	66

REVISIONS

P	LTR	DESCRIPTION	DATE	DWN	APVD
	-	SEE SHEET 1	-	-	-

PACIFIC VERSION TERMINATOR INTERFACE ADAPTER

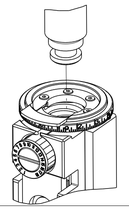

PART NUMBER	REVISION	DESCRIPTION	FEED TYPE
2-2266120-1	A	FINE CRIMP HEIGHT ADJUST	MECHANICAL
2-2266120-2	A	FINE CRIMP HEIGHT ADJUST	PNEUMATIC
2-2266120-5	A	FINE CRIMP HEIGHT ADJUST	SERVO LATCH PLATE 4
2-2266120-7	A	FINE CRIMP HEIGHT ADJUST	NONE
7-2266120-7	A	CRIMP TOOLING KIT	-
7-2266120-8	A	APPLICATOR CONVERSION KIT	- 4

APPLICATOR STYLE CONVERSION CHART

CONVERT TO	PART NUMBERS REQUIRED					
PNEUMATIC FEED	2119950-1	1338685-1	5-18022-5	2119641-2	2119799-1	2063440-1
SERVO LATCH PLATE	2119951-1	-	8-2266120-5	1901094-3	-	2168400-6 (QUANTITY 2)
SMART APPLICATOR	2161326-1	-	8-2266120-4	-	-	-
MECHANICAL FEED	2119949-1	1338685-1	5-18022-5	2119653-2	-	-
SERVO LATCH PLATE	2119951-1	-	8-2266120-5	1901094-3	-	2168400-6 (QUANTITY 2)
SMART APPLICATOR	2161326-1	-	8-2266120-4	-	-	-
MECHANICAL FEED	2119949-1	1338685-1	5-18022-5	2119653-2	-	-
PNEUMATIC FEED	2119950-1	1338685-1	5-18022-5	2119641-2	2119799-1	2063440-1
-	-	-	-	-	-	-
-	-	-	-	-	-	-

APPLICATOR DATA

CRIMP	SIZE	TYPE
WIRE	1.75 mm [.069]	F
INSUL	1.32 mm [.052]	O

APPLICATOR INSTRUCTIONS 408-10389

12 APPLICATOR CONVERSION KITS

PART NUMBER	INSULATION DIAMETER RANGE
7-2266116-8	Ø2.67-3.18mm [.105-.125]
7-2266117-8	Ø2.16-2.82mm [.085-.111]
7-2266118-8	Ø1.91-2.67mm [.075-.105]
7-2266119-8	Ø1.62-2.16mm [.064-.085]
7-2266120-8	Ø1.27-1.91mm [.050-.075]

TERMINAL DATA: DEUTSCH TERMINAL DEUTSCH CRIMP SPECIFICATION

TERMINAL NAME: STAMPED CONTACT PIN SIZE 20

WIRE STRIP LENGTH	INSULATION DIAMETER RANGE
3.81-5.09 mm [.150-.200 IN]	Ø1.27-1.91 mm [.050-.075 IN]
TERMINAL APPLICATION SPECIFICATION 0425-059-0000 Rev L	- -
- - -	

TERMINALS APPLIED

TE TERMINAL	DEUTSCH TERMINAL	TE TERMINAL	DEUTSCH TERMINAL
1572032-3	1060-20-0222	1572032-4	1060-20-0244
1572032-8	1060-20-0277		

TERMINAL DATA: DEUTSCH TERMINAL DEUTSCH CRIMP SPECIFICATION

TERMINAL NAME: STAMPED CONTACT SOCKET SIZE 20

WIRE STRIP LENGTH	INSULATION DIAMETER RANGE
3.81-5.09 mm [.150-.200 IN]	Ø1.27-1.91 mm [.050-.075 IN]
TERMINAL APPLICATION SPECIFICATION 0425-059-0000 Rev L	- -
- - -	

TERMINALS APPLIED

TE TERMINAL	DEUTSCH TERMINAL	TE TERMINAL	DEUTSCH TERMINAL
286680-3	1062-20-0222	286680-4	1062-20-0244
1-286680-1	1062-20-0277		

WIRE SIZE	CRIMP HEIGHT mm [INCH]	CRIMP HEIGHT REFERENCE SETTING 9
1.00mm2	1.27+0.03/-0.05 [.050+.001/-.002]	5.4
18 AWG	1.24+0.03/-0.05 [.049+.001/-.002]	5.7
0.75mm2	1.22+0.03/-0.05 [.048+.001/-.002]	5.9
0.60mm2	1.07+0.03/-0.05 [.042+.001/-.002]	7.4
20 AWG	0.99+0.03/-0.05 [.039+.001/-.002]	8.2
0.50mm2	0.97+0.03/-0.05 [.038+.001/-.002]	8.4
22 AWG	0.94+0.03/-0.05 [.037+.001/-.002]	8.7
0.35mm2	0.94+0.03/-0.05 [.037+.001/-.002]	8.7

1 RECOMMENDED SPARE PARTS

2 GREASE BEARING SURFACES LIGHTLY

3. LUBRICATE DAILY PER THE APPLICATOR INSTRUCTION SHEET SUPPLIED WITH THE APPLICATOR.

4 APPLICATOR SPECIFIC DATA TO BE ENTERED INTO BLANK MEMORY CHIP AT ASSEMBLY. SEE BELOW FOR PART NUMBER:
MECHANICAL FEED WITH "SMART APPLICATOR" CONVERSION: 8-2266120-4
PNEUMATIC FEED WITH "SMART APPLICATOR" CONVERSION: 8-2266120-4
SERVO FEED WITH "FINE CRIMP HEIGHT ADJUST": 8-2266120-5

5. ADJUSTMENT OF THE STRIPPER MAY BE REQUIRED WHEN MOVING THE APPLICATOR BETWEEN BENCH AND LEADMAKER APPLICATIONS.

6 APPLY PART NUMBER 1-23419-5 LOCTITE TO THREADS OF ITEMS 62. APPLY PART NUMBER 2-23419-6 LOCTITE TO THREADS OF ITEMS 242.

7 GREASE THREADS, GROOVE AND O-RING ON ITEMS 139 & 152.

8 MAGNET MUST BE ORIENTED CORRECTLY IN ORDER TO PROPERLY ACTUATE THE COUNTER.

9 CRIMP HEIGHT REFERENCE SETTING WAS THE SETTING USED WHEN THE APPLICATOR WAS QUALIFIED AT THE FACTORY. ADJUSTMENT MAY BE NECESSARY WHEN RUNNING APPLICATOR IN THE FIELD.

10 SPARE FEED CAM STORAGE LOCATION REFER TO INSTRUCTION SHEET FOR ADDITIONAL INFORMATION.

11 TO CONVERT THE APPLICATOR TO A NON-CARRIER CUTTING STYLE, REMOVE ITEM 13 AND ATTACH TO THE LOCATION ON BACK SIDE OF THE HOUSING. REFER TO INSTRUCTION SHEET FOR ADDITIONAL INFORMATION.

12 SEE APPROPRIATE APPLICATOR LOG SHEETS FOR APPLIED TERMINALS, WIRE RANGE AND MEMORY CHIP.

*WARNING
ON INSTALLATION, SET WIRE DISC, ITEM 40 TO LARGEST WIRE SIZE SETTING. USE OF SETTINGS BELOW MINIMUM REQUIRED CRIMP HEIGHT SETTING WILL CAUSE DAMAGE TO CRIMP TOOLING.

-78	-77	-27	-25	-22	-21	PART NO	DESCRIPTION	ITEM NO
-	-	1	1	1	1	2119782-1	FINE ADJUST HEAD ASM, PACIFIC STYLE	251
-	-	-	-	1	-	2119640-1	PUSH ROD, AIR FEED	250
-	-	-	-	1	-	2079988-1	BUSHING, LCH5-12, MISUMI	249
-	-	1	1	1	1	1-22279-3	SPRING, COMPRESSION	246
-	-	1	1	1	1	2119082-9	CAM, SNAIL, INSULATION ADJUSTMENT	244

PACIFIC VERSION
Shown on sheets 3 of 4 & 4 of 4
(Atlantic version shown on sheets 1 of 4 & 2 of 4)

-78	-77	-27	-25	-22	-21	PART NO	DESCRIPTION	ITEM NO
-	-	1	1	1	1	2079764-1	WASHER, WAVE SPRING, CREST-TO-CREST	243
-	-	1	1	1	1	2119083-1	RETAINER, INSULATION DIAL	242
-	-	1	1	1	1	7-18023-7	SCR, SKT HD CAP M3 X 4.0	241
-	-	-	2	-	-	2168400-6	SHCS, LOW HEAD, RoHS, M5 X 16	240
-	-	-	-	-	1	2119580-1	MECHANICAL FEED ASSEMBLY	239
-	-	-	-	1	-	2063440-1	AIR FEED MODULE	238
-	-	-	1	-	-	2119740-2	TAG,IDENTIFICATION	213
-	-	-	1	-	-	1901094-3	SPACER, FEEDER	198
-	-	-	-	2	-	21045-3	RING, RETAIN, EXTERN, 3/16 CRESCENT	172
-	-	1	1	1	1	994969-1	MAGNET, RARE EARTH HIGH ENERGY	166
-	-	REF	REF	REF	REF	994970-2	COUNTER, MAGNETIC	164
-	-	-	-	1	-	240638-1	SPRING, FEED FINGER	163
-	-	1	1	1	1	8-21084-1	O-RING, .801 ID, .070 DIA. MAT.	152
-	-	-	-	1	-	2119641-2	FEED CAM, AIR FEED	151
-	-	1	1	1	1	2119798-2	DETENT PIN	145
-	-	1	1	1	1	2079383-8	SCR, BHSC, RoHS (M4 X 16)	144
-	-	4	4	4	4	2168400-5	SHCS, LOW HEAD, RoHS, M4 X 20	143
-	-	-	-	-	1	2119653-2	FEED CAM, POST FEED	142
-	-	1	1	1	1	1-2119656-0	APPLICATOR BASIC ASSEMBLY, SF	141
-	-	1	1	1	1	2119650-1	RAM, ASIAN STYLE, SIDE FEED	140
-	-	1	1	1	1	2119092-2	BOLT, ADJUSTMENT	139
-	-	-	-	1	-	3-23627-7	PIN, RETAIN, GRVD, 3/16 X .854	137
-	-	-	-	1	-	2119799-1	HOLDER,FEED FINGER, AF	136
-	-	-	REF	-	-	SEE NOTE 4	MEMORY CHIP, PROGRAMMED	135
-	-	-	1	-	-	1633743-1	SERVO FEED LATCH ASM	133
-	-	1	1	1	1	1-18028-2	WASHER, FLAT, REG M4	119
-	-	-	REF	-	-	2119944-1	FEED FINGER ASSEMBLY,SF	117
-	-	1	1	1	1	455888-7	SPACER, CRIMPER	82
-	-	1	1	1	1	22278-8	SPRING, COMPRESSION	77
-	-	1	1	1	1	854769-4	HOLDER, INS	74
1	-	-	-	-	-	2266120	PRINT, APPLICATOR LOG SHEET	72
-	-	1	1	1	1	2119956-1	DOCUMENTATION PACKAGE	71
-	-	1	1	1	1	2119791-9	DEPRESSOR, WIRE	70
-	-	1	-	1	1	2119740-1	TAG,IDENTIFICATION	67
-	-	2	2	2	2	2168078-1	SCREW, DRIVE, RH, RoHS, 2 x .188	66
-	-	1	1	1	1	2119793-1	LIMITER, ADJUSTMENT BOLT	63
-	-	3	3	3	3	992763-5	SCR, SET, SOC, CONE POINT, M3 x 4.0	62
-	-	-	-	1	1	5-18022-5	SCR, HEX HD CAP, M4 X 6.0	59
-	-	1	1	1	1	21028-2	PIN, SLOTTED SPRING .062 X .250	58
-	-	-	-	1	1	1338685-1	PAWL, FEED	56
-	-	2	2	2	2	1-2168083-0	SCR, SKT HD CAP, RoHS, M4 X 10	53
-	-	1	1	1	1	5018030-1	NUT, HEX, REG, RoHS, M3	52
-	-	1	1	1	1	811242-5	BUMPER, HOLD DOWN	51
-	-	1	1	1	1	690753-2	SPACER, TONKER	50
-	-	-	-	1	2	18023-9	SCR, SKT HD CAP M4 X 6.0	49
-	-	-	-	-	1	2119652-1	FEED CAM, PRE FEED	48
-	-	1	1	1	1	2079383-7	SCR, BHSC, RoHS (M8 X 25)	41
-	-	1	1	1	1	2119645-1	DISC, NUMBERED FA WIRE ADJUSTMENT	40
-	-	1	1	1	1	2119957-1	APPLICATOR SHIM PACK	39
-	-	1	1	1	1	2119644-1	RAM WASHER, PRECISION	38
-	-	1	1	1	1	2-1752356-0	SUPPORT, TERMINAL	34
-	-	2	2	2	2	2079383-5	SCR, BHSC, RoHS (M4 X 20)	33
-	-	1	1	1	1	2161328-1	HEX HEAD, FLANGED, M5 x 8mm LONG	32
-	-	1	1	1	1	1-1320908-0	SPACER, STRIP GUIDE	30
-	-	1	1	1	1	2119959-1	ASSEMBLY, STRIP GUIDE	29
-	-	1	1	1	1	455888-3	SPACER, CRIMPER	28
-	-	1	1	1	1	1320928-2	STRIP GUIDE	24
-	-	1	1	1	1	2168083-2	SCR, SKT HD CAP, RoHS, M4 X 8.0	21
-	-	1	1	1	1	1-18028-2	WASHER, FLAT, REG M4	20
-	-	1	1	1	1	2119533-1	STRIPPER, SIDE FEED	19
-	-	1	1	1	1	2119806-1	INSERT, SHEAR	13
-	-	1	1	1	1	3-22280-3	SPRING, COMPRESSION	12
-	-	1	1	1	1	1-356885-4	STOP, SHEAR	11
-	-	1	1	1	1	2119805-1	SHEAR HOLDER, FRONT	10
-	-	1	1	1	1	1803095-1	FLOATING SHEAR, FRONT	9
1	1	1	1	1	1	2-1803054-7	ANVIL, COMBINATION	8
-	-	-	-	-	-	-	-	7
-	-	-	-	-	-	-	-	6
-	-	1	1	1	1	2119780-9	DEPRESSOR, SHEAR	5
-	-	1	1	1	1	238011-9	BLOCK, CRIMPER SPACER	4
1	1	1	1	1	1	1803019-8	CRIMPER, INSULATION O	3
-	-	1	1	1	1	455888-4	SPACER, CRIMPER	2
-	1	1	1	1	1	4-1633713-4	CRIMPER, WIRE PREMIUM	1

THIS DRAWING IS A CONTROLLED DOCUMENT FOR TYCO ELECTRONICS CORPORATION. IT IS SUBJECT TO CHANGE AND THE CONTROLLING ENGINEERING ORGANIZATION SHOULD BE CONTACTED FOR THE LATEST REVISION.

DIMENSIONS: mm

TOLERANCES UNLESS OTHERWISE SPECIFIED:
0 PLC ±-
1 PLC ±0.5
2 PLC ±0.13
3 PLC ±0.013
4 PLC ±0.0001
ANGLES ±-

MATERIAL - -
FINISH - -

DWN	R KNEPPER	17-Oct-13
CHK	G BAILEY	17-Oct-13
APVD	M CLIFFORD	17-Oct-13
PRODUCT SPEC	-	
APPLICATION SPEC	-	
WEIGHT	-	

TE Connectivity
Harrisburg, PA 17105-3608

NAME: Ocean Side Feed Applicator -

SIZE	CAGE CODE	DRAWING NO	RESTRICTED TO
A1	00779	C-2266120	-

Customer Accessible Production Drawing | SCALE 1:2 | SHEET 3 OF 4 | REV A2

SHEETS 1 & 2 ARE NOT REQUIRED FOR PACIFIC VERSION

THIS DRAWING IS UNPUBLISHED. RELEASED FOR PUBLICATION 20
© COPYRIGHT 20 BY TYCO ELECTRONICS CORPORATION. ALL RIGHTS RESERVED.

LOC	DIST
A	66

REVISIONS

P	LTR	DESCRIPTION	DATE	DWN	APVD
	-	SEE SHEET 1	-	-	-

FEED TYPE

MECHANICAL

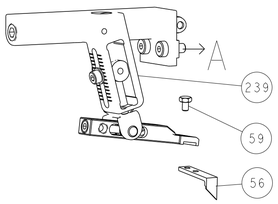

PNEUMATIC

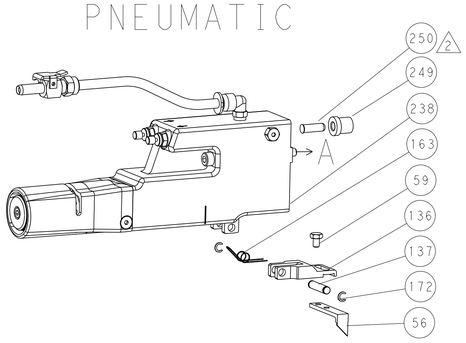

SERVO LATCH PLATE

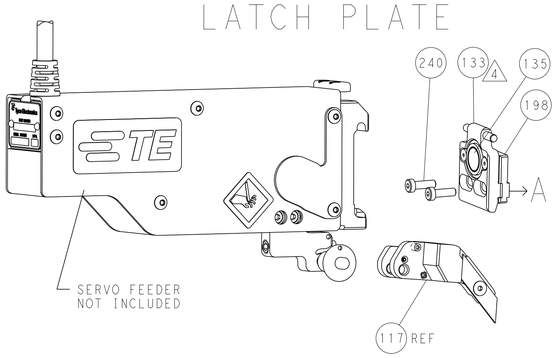

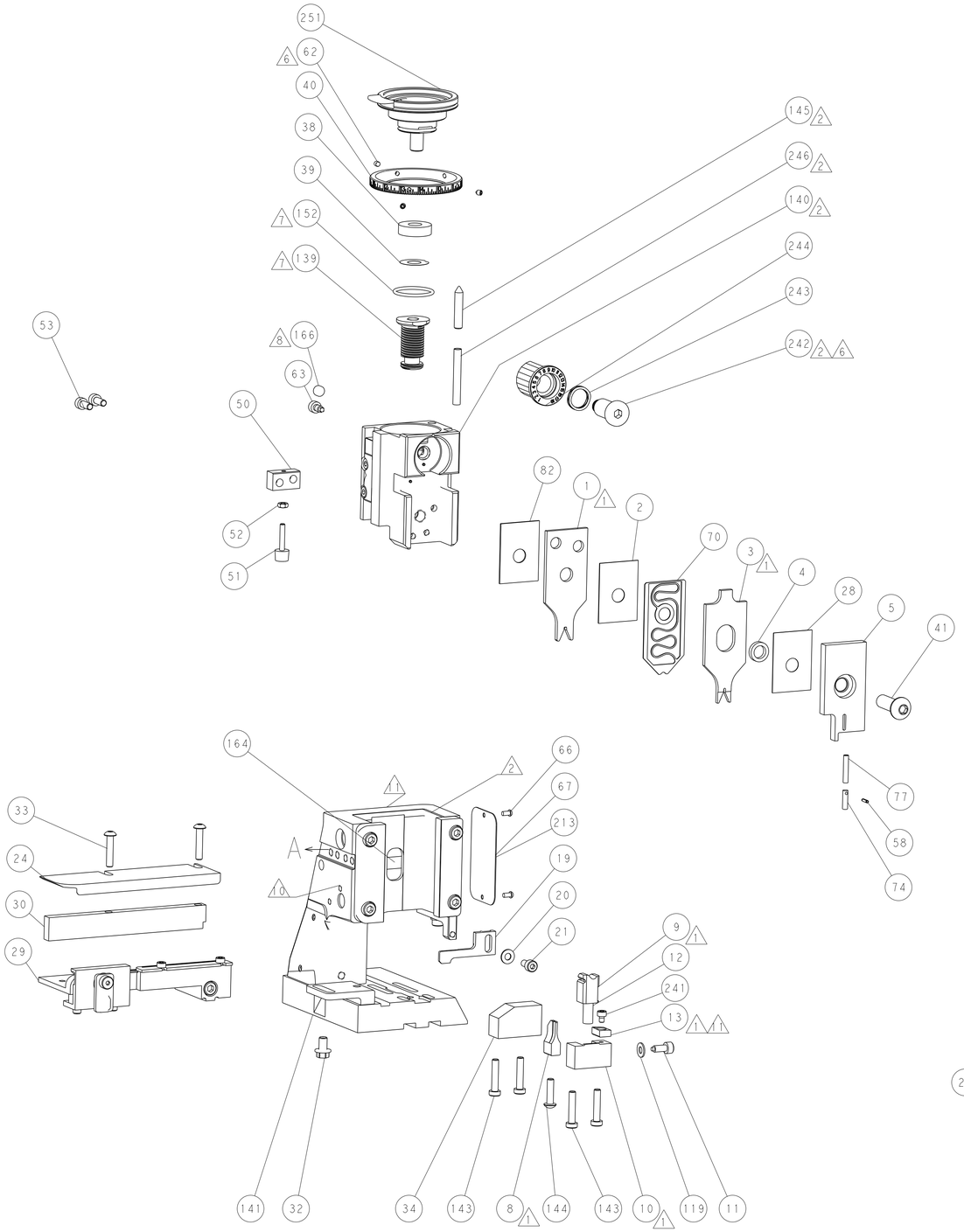

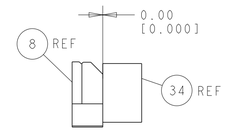

TERMINAL SUPPORT LOCATION

ITEM 30 LOCATED AT
FRONT HOLES

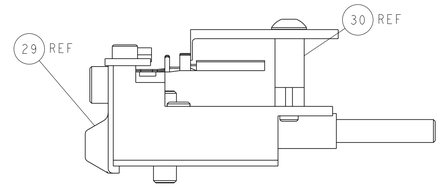

FEED TRACK POSITION
GUIDE BY WIRE BARREL

CAM POSITIONS

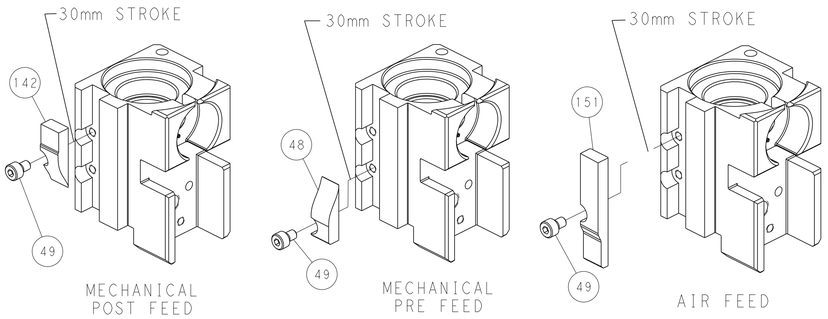

MECHANICAL
POST FEED

MECHANICAL
PRE FEED

AIR FEED

PACIFIC VERSION

Shown on sheets 3 of 4 & 4 of 4
(Atlantic version shown on sheets 1 of 4 & 2 of 4)

THIS DRAWING IS A CONTROLLED DOCUMENT FOR TYCO ELECTRONICS CORPORATION
IT IS SUBJECT TO CHANGE AND THE CONTROLLING ENGINEERING ORGANIZATION
SHOULD BE CONTACTED FOR THE LATEST REVISION

DWN	R KNEPPER	17-Oct-13
CHK	G BAILEY	17-Oct-13
APVD	M CLIFFORD	17-Oct-13
PRODUCT SPEC	-	
APPLICATION SPEC	-	
WEIGHT	-	

DIMENSIONS: mm

TOLERANCES UNLESS OTHERWISE SPECIFIED:

0 PLC	±-
1 PLC	±0.5
2 PLC	±0.13
3 PLC	±0.013
4 PLC	±0.0001
ANGLES	±-

MATERIAL - -

FINISH - -

TE Connectivity
Harrisburg, PA 17105-3608

NAME: Ocean Side Feed Applicator -

SIZE	CAGE CODE	DRAWING NO	RESTRICTED TO
A1	00779	C-2266120	-

Customer Accessible Production Drawing

SCALE	SHEET	OF	REV
1:2	4	4	A2

SHEETS 1 & 2 ARE NOT REQUIRED FOR PACIFIC VERSION