THIS DRAWING IS UNPUBLISHED. RELEASED FOR PUBLICATION 2012
© COPYRIGHT 2012 BY TE CONNECTIVITY ALL RIGHTS RESERVED.

REVISIONS

P	LTR	DESCRIPTION	DATE	DWN	APVD
	A	RELEASED PER ECO 15-017318	12-8-15	CT	DH

1. MATERIAL: HOUSINGS LCP, COLOR: NATURAL
   CONTACT: PHOSPHOR BRONZE.
   SOLDER BALL: SEE TABLE
   FILM TAPE: KAPTON WITH SILICON ADHESIVE.
2. FINISH: CONTACTS: GOLD (SEE TABLE) ON MATING AREAS
   NICKEL ON ENTIRE CONTACT.
3. PRODUCT IS PACKAGED ON TAPE AND REELED.
4. PRELIMINARY PART.
5. DIAGRAM REPRESENTS THE REELING DIRECTION OF THE PACKAGED CONNECTORS. THERE ARE 10 EMPTY POCKETS AT THE BEGINNING OF THE REEL AND 15 EMPTY POCKETS AT THE END OF THE REEL.

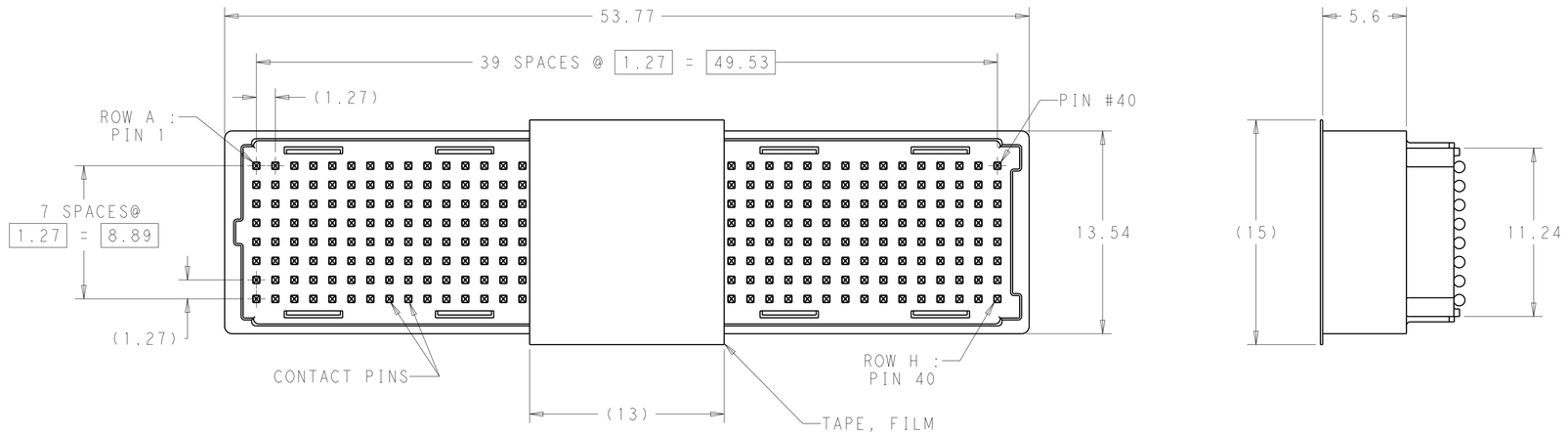

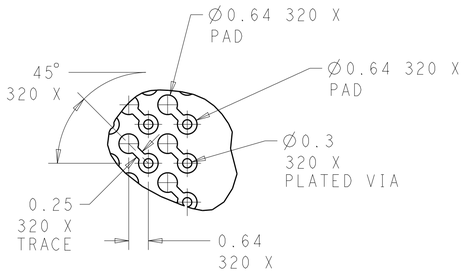

DETAIL Z
SCALE 10:1

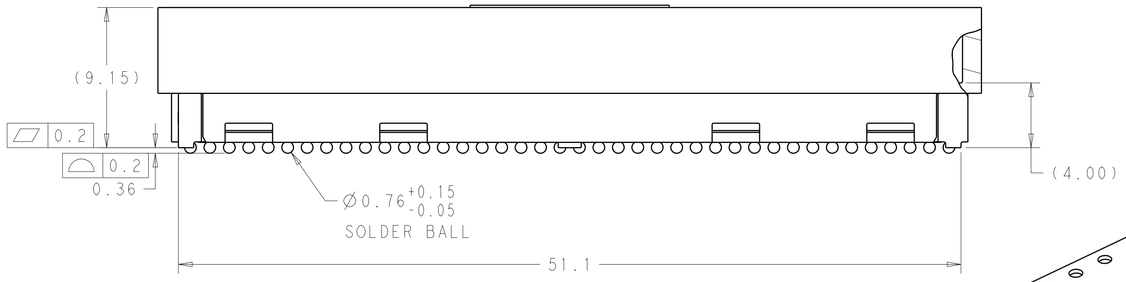

SECTION Y-Y

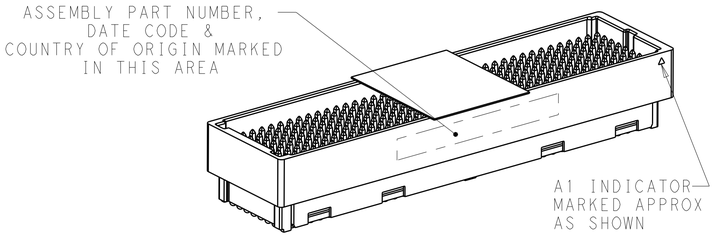

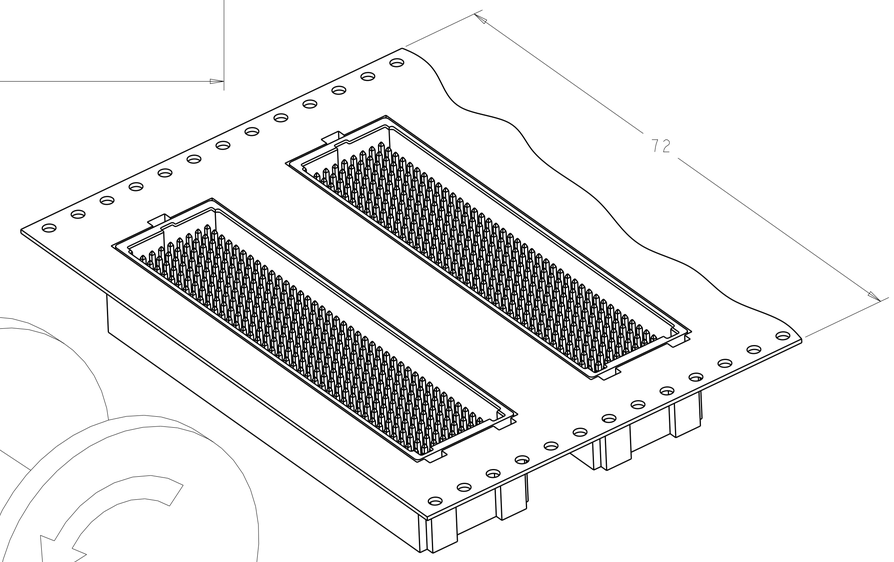

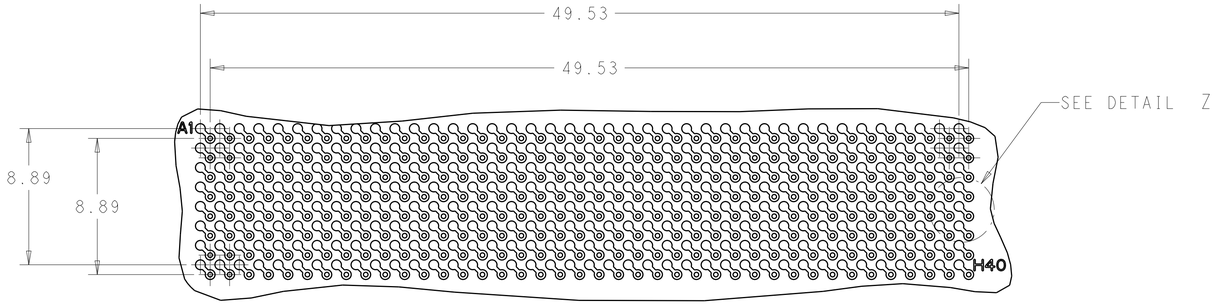

PCB LAYOUT (CONNECTOR SIDE)

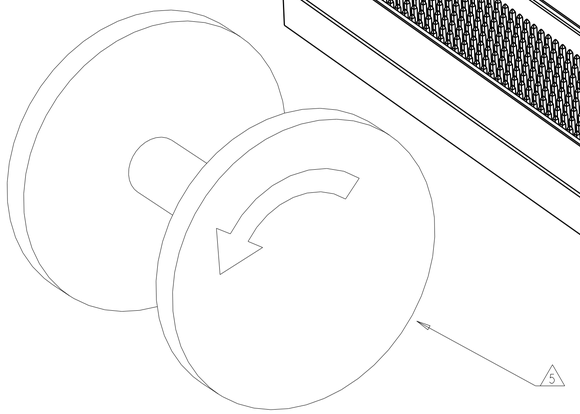

18mm STACK MATING CONNECTOR	15mm STACK (4) MATING CONNECTOR	12mm STACK (4) MATING CONNECTOR	10mm STACK MATING CONNECTOR	GOLD PLATING THICKNESS	SOLDER BALL MATERIAL	PART NUMBER
1-2102430-2	1-2102430-6	2102430-8	2102430-6	0.76 µm	LEAD FREE PER SAC405	2102429-4
1-2102430-1	1-2102430-5	2102430-7	2102430-5	0.76 µm	TIN LEAD	2102429-3
1-2102430-0	1-2102430-4	2102430-4	2102430-2	1.27 µm	LEAD FREE PER SAC405	2102429-2
2102430-9	1-2102430-3	2102430-3	2102430-1	1.27 µm	TIN LEAD	2102429-1

THIS DRAWING IS A CONTROLLED DOCUMENT.

DIMENSIONS: mm

TOLERANCES UNLESS OTHERWISE SPECIFIED:
0 PLC ±-
1 PLC ±0.5
2 PLC ±0.13
3 PLC ±0.013
4 PLC ±0.0001
ANGLES ±1°

MATERIAL (1)
FINISH (2)

DWN MCKIBBEN, JOHN 18JUL2012
CHK DOWHOWER, KENNETH -
APVD - -
PRODUCT SPEC 108-2411
APPLICATION SPEC 114-132776
WEIGHT -

TE Connectivity

NAME ASSEMBLY, PIN HOUSING XMC MEZZANINE 320 POSITION
-

SIZE A1 | CAGE CODE 00779 | DRAWING NO C-2102429 | RESTRICTED TO -

CUSTOMER DRAWING | SCALE 3:1 | SHEET 1 OF 1 | REV A

4805 (3/13)