THIS DRAWING IS UNPUBLISHED. RELEASED FOR PUBLICATION -,- .
© COPYRIGHT - By - ALL RIGHTS RESERVED.

LOC	DIST
GP	00

REVISIONS

P	LTR	DESCRIPTION	DATE	DWN	APVD
	B1	REVISED PER ECO-11-005033	23MAR11	RK	HMR

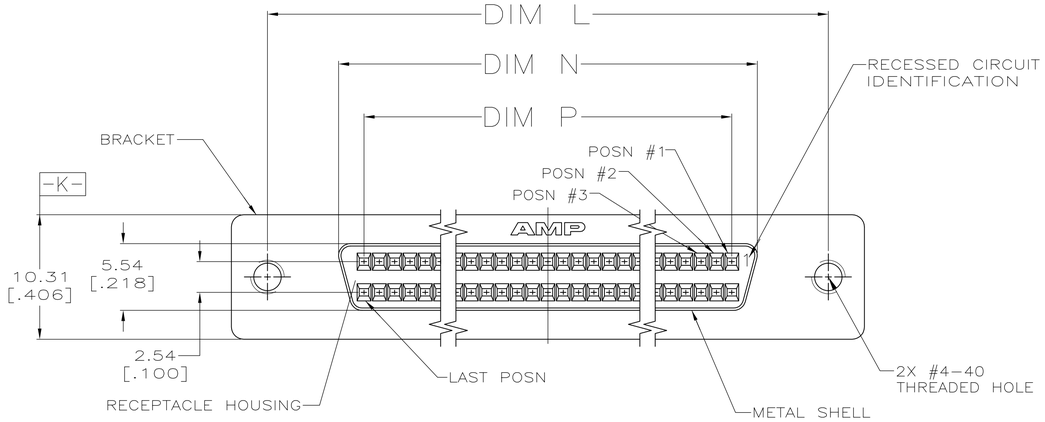

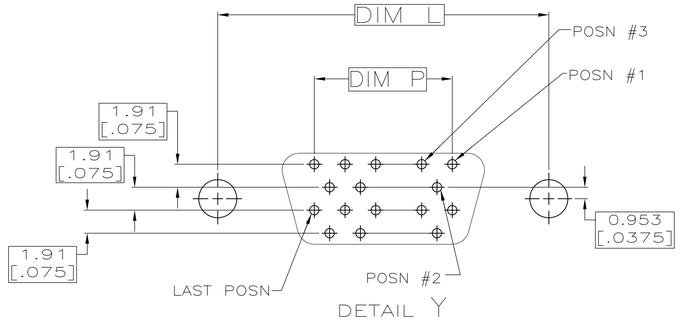

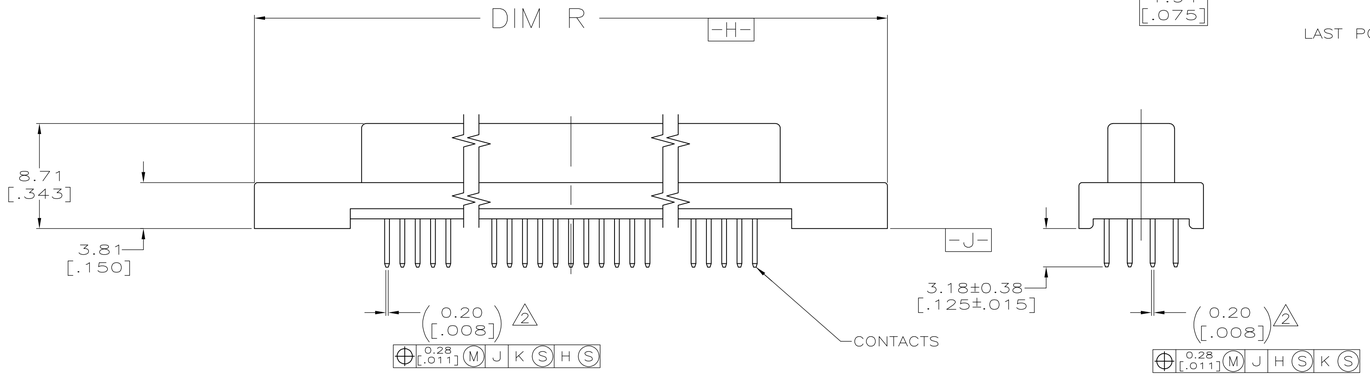

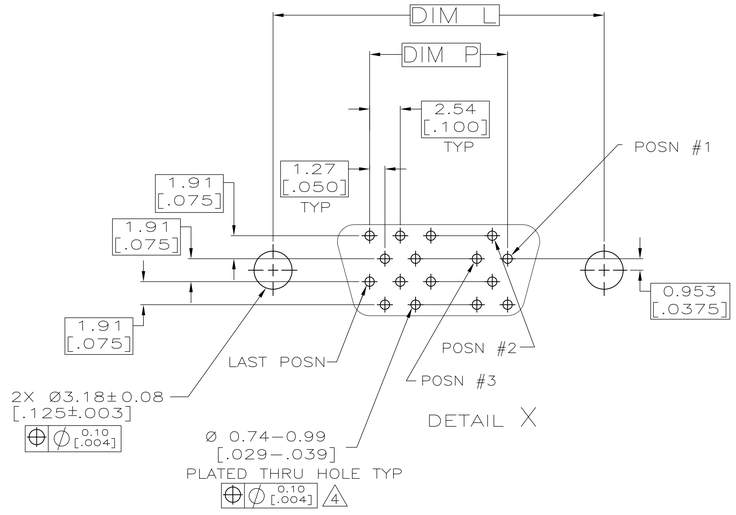

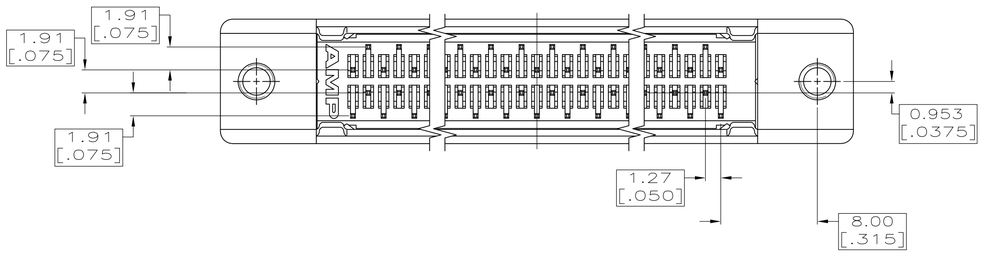

P.C.BOARD MOUNTING DIMENSIONS

(CONNECTOR SIDE)

1. FINISH
   CONTACTS: EITHER .76μm [.000030] MIN GOLD OR GOLD FLASH OVER PALLADIUM NICKEL, 0.76μm [.000030] MIN TOTAL ON MATING END. TIN PLATED 3.05μm [.000120] MINIMUM THICK ON SOLDER LEAD, ALL OVER 1.27μm [.000050] MINIMUM THICK NICKEL UNDERPLATE.
   METAL SHELL: 5.08μm [.000200] MIN NICKEL OVER 1.27μm [.000050] MIN COPPER.
   BRACKET: NICKEL PLATE.
2. POSITION TOLERANCE APPLIES AT TIP ONLY.
3. MATERIAL
   CONTACTS: PHOSPHOR BRONZE
   RECEPTACLE HOUSING: UL V-O RATED THERMOPLASTIC COLOR BLACK
   BRACKET: ZINC
   METAL SHELL: CARBON STEEL.
4. ACTUAL HOLE SIZE USED WILL DEPEND ON TRACE ROUTING REQUIREMENTS BETWEEN HOLES AND CONNECTOR PLACEMENT TECHNIQUE.

PWB PATTERN	R	P	N	L	NO.OF POSN	PART NUMBER
X	84.20 [3.315]	62.23 [2.450]	66.45 [2.616]	78.23 [3.080]	100	5749070-9
X	63.88 [2.515]	41.91 [1.650]	46.13 [1.816]	57.91 [2.280]	68	5749070-7
Y	52.45 [2.065]	30.48 [1.200]	34.70 [1.366]	46.48 [1.830]	50	5749070-5

THIS DRAWING IS A CONTROLLED DOCUMENT.

DIMENSIONS: mm[INCHES]

TOLERANCES UNLESS OTHERWISE SPECIFIED:
0 PLC ± -
1 PLC ± -
2 PLC ± 0.12[.005]
3 PLC ± -
4 PLC ± -
ANGLES ± -

MATERIAL 3 FINISH 1

DWN A. FERNANDEZ-DOCK5 02-28-05
CHK S. SHUEY 02-28-05
APVD M. WALMSLEY 02-28-05
PRODUCT SPEC —
APPLICATION SPEC —
WEIGHT —

TE Connectivity

NAME RECEPTACLE ASSEMBLY, SHIELDED,VERTICAL, AMPLIMITE .050 Series

SIZE	CAGE CODE	DRAWING NO	RESTRICTED TO
A1	00779	C-5749070	—

CUSTOMER DRAWING SCALE 4:1 SHEET 1 OF 1 REV B1

4805 (3/11)