REVISIONS				
EC NO	DATE	REV	DESCRIPTION	CHANGER
NA	2016/08/01	A	INITIAL RELEASE	LH LIU

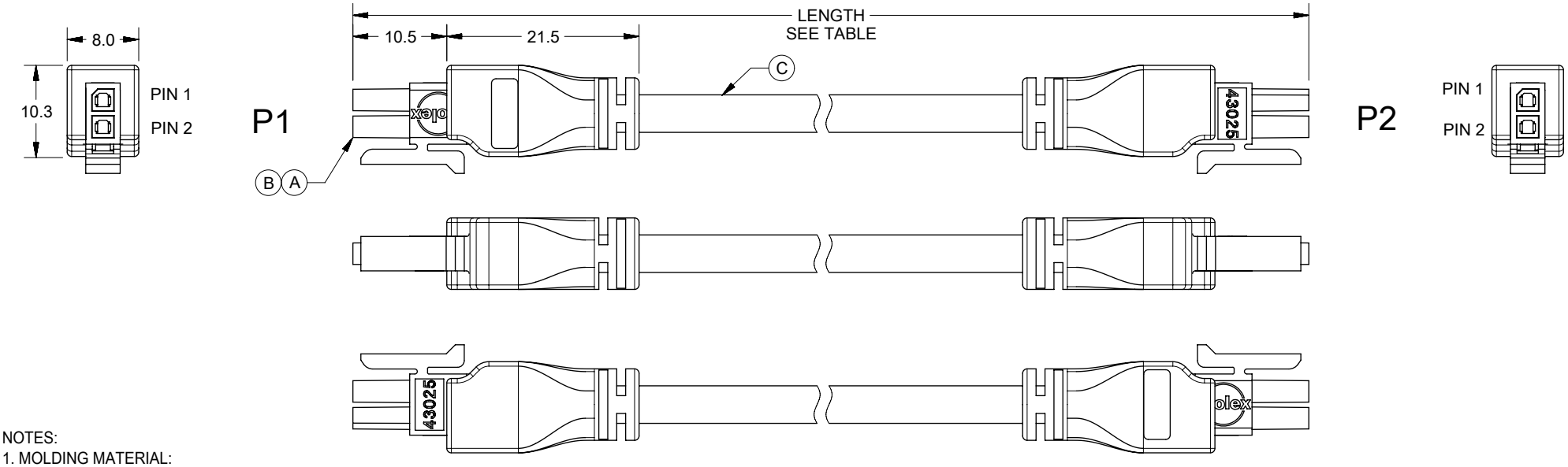

NOTES:
1. MOLDING MATERIAL:
 1.1 INNERMOLD AND STOPPER MOLD: PE RESIN.
 1.2 OVERMOLD: BLACK PVC RESIN.
2. ELECTRICAL PERFORMANCE:
 2.1 CURRENT RATING: 5.5 AMPS.
 (EACH APPLICATION SHOULD BE EVALUATED BY THE END USER FOR COMPLIANCETO SPECIFIC SAFETY AGENCY REQUIREMENTS. THE RATING IS PROVIDED AS REFERENCE. APPROPRIATE DE-RATING IS REQUIRED BASED ON AMBIENT CONDITIONS,COPPER TRACE SIZE ON THE PCB, GROSS HEATING FROM ADJACENT MODULES/COMPONENTS AND OTHER FACTORS THAT INFLUENCE CONNECTOR PERFORMANCE.)
 2.2 VOLTAGE RATING: 300V AC.
 2.3 THIS PRODUCT MUST PASS 100% CONTINUITY TEST PER MOLEX ES-000.
 1) DIELECTRONIC STRENGTH: 500V DC/0.01 SEC.
 2) INSULATION RESISTANCE: 20M OHMS.
3. MECHANICAL PERFORMANCE:
 3.1 OVERMOLD SIDE CAN WITHSTAND 5KGF AXIAL TENSILE FORCE FOR ONE MINUTE WITHOUT PHYSICAL DAMAGE.
 3.2 OVERMOLD SIDE CAN PASS THE BENDING TEST IN 100 CYCLES AT EACH OF 2 PLANES, PER EIA364-41 CONDITION I.
 3.3 MINIMUM DYNAMIC BEND REDIUS: 50MM
 3.4 MINIMUM STATIC BEND REDIUS: 25MM
4. TEMPERATURE:
 4.1 OPERATING TEMPERATURE: -20 TO 80 C DEG.
 (INCLUDING T-RISE FROM APPLIED CURRENT)
5. ALL MATERIALS MUST MEET RoHS 2011/65/EU.

TABLE

PN	TITLE	LENGTH
2451320250	MICROFIT 2 CIRCUIT BLACK 5M OM	5000±50
2451320230	MICROFIT 2 CIRCUIT BLACK 3M OM	3000±30
2451320220	Microfit 2 Circuit Black 2M Overmolded	2000±20
2451320210	Microfit 2 Circuit Black 1M Overmolded	1000±15
2451320205	Microfit 2 Circuit Black 500MM OM	500±10

WIRING CHART		
P1	WIRE COLOR	P2
PIN 1	BLACK	PIN 1
PIN 2	RED	PIN 2

ITEM	DESCRIPTION	L(MM)	Q'TY
C	2C*20AWG;UNSH;PVC;BK;OD=5.20MM;UL2464	SEE TABLE	
B	MicroFit 3.0 DR Rcpt 2Ckt		2
A	MicroFit 3.0 F Crp Term Chn Tin 20-24		4

QUALITY SYMBOLS	
EA	= 0
EC	= 0
EP	= 0
▼	= 0
C	= 0
☒	= 0
■	= 0
▽	= 0

THIS DRAWING CONTAINS INFORMATION THAT IS PROPRIETARY TO MOLEX ELECTRONIC TECHNOLOGIES, LLC AND SHOULD NOT BE USED WITHOUT WRITTEN PERMISSION

EC NO: 107522	DRWN: XJGUO01	2016/07/28
CHK'D: LHLIU	APPR: FNIE	2016/08/14
		2016/08/15
REV	A	

GENERAL TOLERANCES (UNLESS SPECIFIED)	
ANGULAR TOL ± 2.0 °	
4 PLACES	±
3 PLACES	±
2 PLACES	± 0.25
1 PLACE	± 0.5
0 PLACES	±
DRAFT WHERE APPLICABLE MUST REMAIN WITHIN DIMENSIONS	

DIMENSION UNITS	MM
SCALE	1.5:1
DRWN BY	XJGUO01
DATE	2016/06/23
CHK'D BY	LHLIU
DATE	2016/07/27
APPR BY	
DATE	
DRAWING SIZE	A4
THIRD ANGLE PROJECTION	

molex®

SEE TABLE

PRODUCT CUSTOMER DRAWING

SERIES	MATERIAL NUMBER	CUSTOMER
201440	SEE TABLE	GENERAL MARKET

DOCUMENT NUMBER	DOC TYPE	DOC PART	SHEET NUMBER
2014400085	PSD	000	1 OF 2

RELEASE STATUS	P1	RELEASE DATE	16.08.2016 05:56:15

FORMAT: tb-prod-A4
REVISION: G
DATE: 2015/12/14