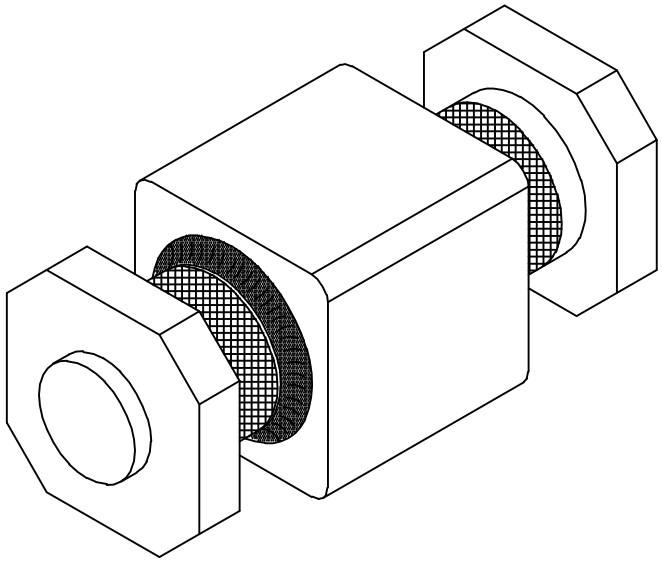

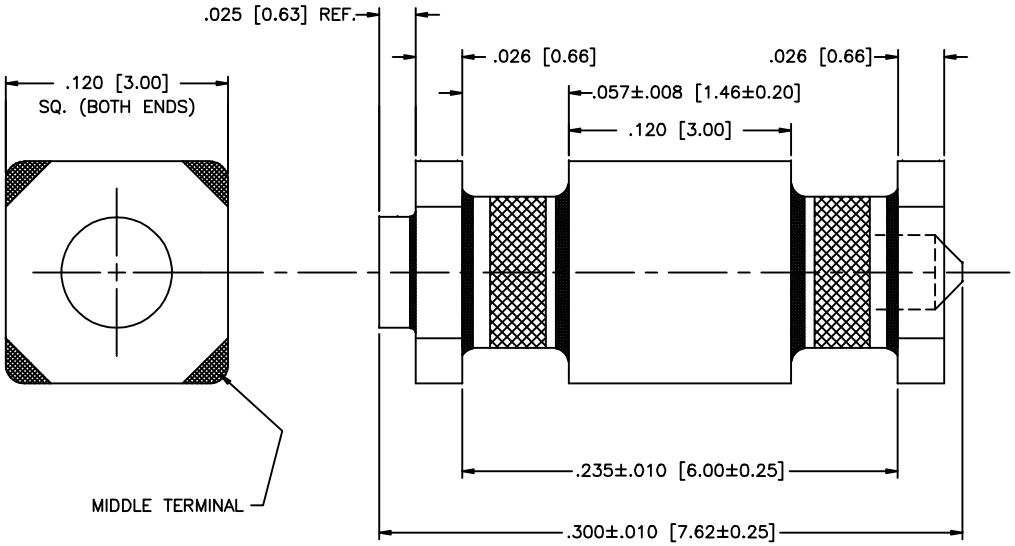

NOTES:

1) CAPACITANCE (1000hrs.): 100pF
2) CAP TOLERANCE: ±20%
3) DISSIPATION FACTOR: 4% MAX.
4) INSULATION RESISTANCE: 25°C 1GOHM
5) 200 VDC RATED @ +125°C
6) DIELECTRIC WITHSTANDING VOLTAGE: 700 VDC
7) CURRENT RATING: 10 AMPS
8) REFLOW TEMPERATURE LIMIT: +235°C FOR 5 SEC. MAX.
9) PACKAGING: BAG (1000 PCS. MAX./ BAG)

MARKING:

PART: NONE

PACKAGE: PART NO.
SCI DATE CODE
QTY.

00	REV. NO.	UNLESS OTHERWISE SPECIFIED DIMENSIONS ARE IN INCHES. DO NOT SCALE.	TOLERANCES UNLESS OTHERWISE SPECIFIED Fractions ± 1/64 Dec. .xx ± .01[0.254] Dec. .xxx ± .005[0.127] Angles ±0° 30′
CN 58267-ENG	CHANGE NOTICE		CODE IDENT. NO. 0LSP2

SPECTRUM CONTROL INC.

FAIRVIEW PENNSYLVANIA

Dwn. KAUFFMAN

Date 3-16-11

Apvd.

Sheet 1 of 2

Description: SURFACE MOUNT FILTER

PSM4F-101M-10B

Quality Products From The Specialists In Electro-Magnetic Compatibility

Mouser Electronics

Authorized Distributor

Click to View Pricing, Inventory, Delivery & Lifecycle Information:

API Technologies:

PSM1F-101M-10B