THIS DRAWING IS UNPUBLISHED. RELEASED FOR PUBLICATION -,- .
© COPYRIGHT - By - ALL RIGHTS RESERVED.

LOC	DIST
AF	50

REVISIONS

P	LTR	DESCRIPTION	DATE	DWN	APVD
	F	REVISED PER ECR-12-013518	23NOV2012	KH	PD

1 CONTINUOUS STRIP ON REELS

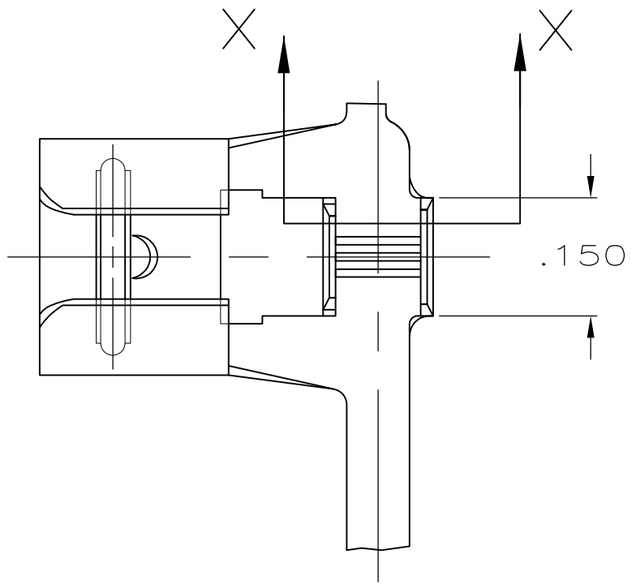

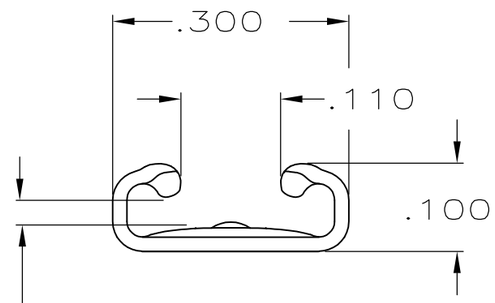

VIEW Y—Y

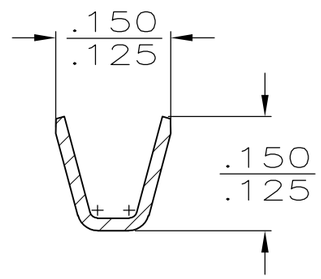

SECTION X—X

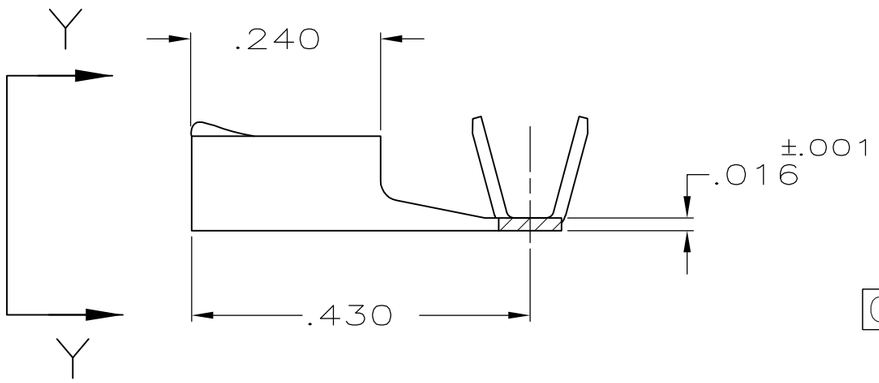

OBSOLETE	PRE-TIN	18-14	.032	~~63508-2~~
	———	18-14	.032	63508-1
	FINISH	WIRE SIZE	MATING TAB THK ±.001	PART NO

.218	F	.110	.070 .061 .055	14 16 18
STRIP LENGTH ±.015	TYPE	WIDTH	±.002 HEIGHT	WIRE

WIRE BARREL CRIMP

THIS DRAWING IS A CONTROLLED DOCUMENT.

DIMENSIONS: INCHES

TOLERANCES UNLESS OTHERWISE SPECIFIED:
0 PLC ± –
1 PLC ± –
2 PLC ± –
3 PLC ± .010
4 PLC ± –
ANGLES ± –

MATERIAL: BRASS

FINISH: SEE TABLE

DWN	JR RUTH	8/3/88
CHK	M FETHER	8/3/88
APVD	C MEYERS	8/4/88
PRODUCT SPEC	R KUZO	
APPLICATION SPEC	—	
WEIGHT	—	

CUSTOMER DRAWING

TE Connectivity

NAME: RECEPTACLE, FASTON,™ FLAG, .250 SERIES

SIZE	CAGE CODE	DRAWING NO	RESTRICTED TO
A3	00779	C-63508	—

SCALE	SHEET	REV
5:1	1 OF 1	F