© 2021 TE Connectivity. All Rights Reserved.

REVISIONS					
P	LTR	DESCRIPTION	DATE	DWN	APVD
	B	REVISED PER PCN-21-118564	07MAR2022	DRK	IG

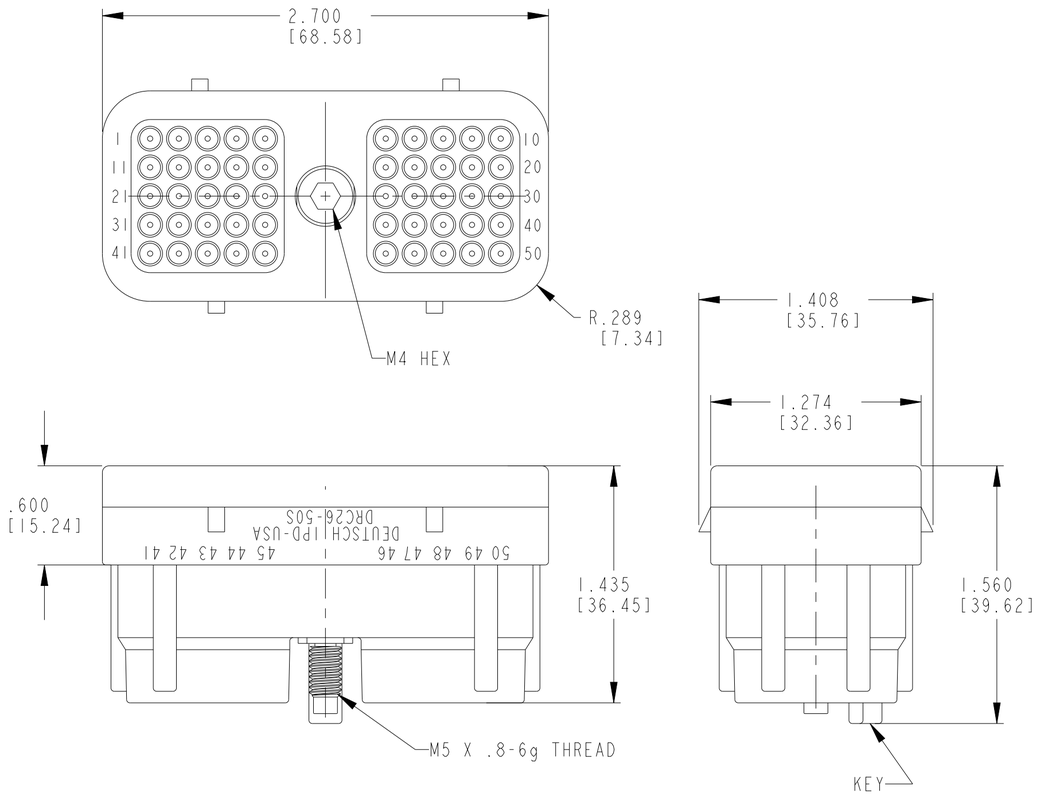

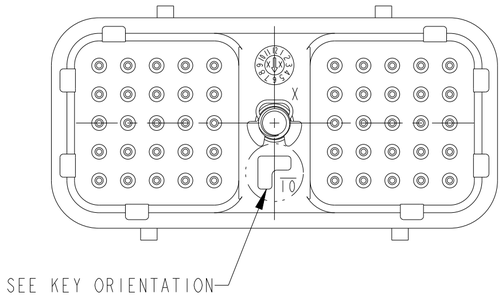

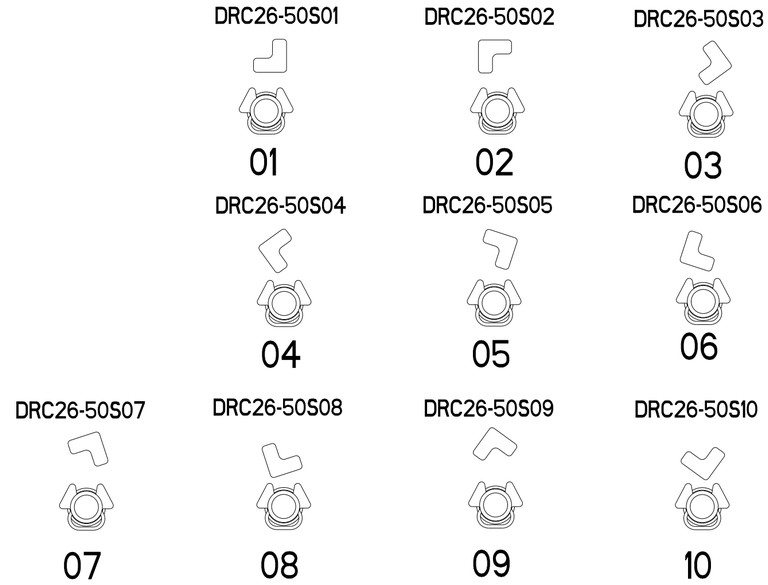

KEY ORIENTATION

TCPN	ALIAS PART NUMBER
DRC26-50S01	DRC26-50S01
DRC26-50S02	DRC26-50S02
DRC26-50S03	DRC26-50S03
DRC26-50S04	DRC26-50S04
DRC26-50S05	DRC26-50S05
DRC26-50S06	DRC26-50S06
DRC26-50S07	DRC26-50S07
DRC26-50S08	DRC26-50S08
DRC26-50S09	DRC26-50S09
DRC26-50S10	DRC26-50S10

5 MATERIAL: HOUSING: PA46 30% GF (BLACK); BOLT: STEEL, TRIVALENT ZINC PLATED (ROHS COMPLIANT);
CLIP: STEEL; GROMMET: VMQ

4. THIS PLUG MATES WITH 09D41107L01 THRU 10-**** AND DRC20-50P01 THRU 10 -****
RECEPTACLE. (**** = ALL MODIFICATIONS)

3. FOR CONTACT AND WIRE PERFORMANCE AND APPLICATION CHARACTERISTICS
SEE ENVELOPE DRAWING 0425-015-0000.

2. RECOMMENDED RETAINING BOLT TORQUE: 25-28 IN-LB [2.82-3.16NM]

1. PLUG IS SUPPLIED WITH DUST CAP. (NOT SHOWN)

NOTES:

CONTACT SIZE	MIN. O.D.	MAX. O.D.	WIRE GAUGE RANGE REF ONLY 3
20	.040 [1.016]	.095 [2.413]	16 - 20 [1.00-.50mm^2]

THIS DRAWING IS A CONTROLLED DOCUMENT.

DIMENSIONS: INCHES [mm]

TOLERANCES UNLESS OTHERWISE SPECIFIED:
0 PLC ±-
1 PLC ±-
2 PLC ±-
3 PLC ±.025 [.64]
4 PLC ±-
ANGLES ±-

MATERIAL 5

FINISH - -

DWN V TOMSA 11OCT1994
CHK D MEYER 20JUL2000
APVD R REED 20JUL2000
PRODUCT SPEC 108-151052
APPLICATION SPEC -
WEIGHT -

TE Connectivity

NAME PLUG
50 CONTACTS, SIZE 20
DRC SERIES

SIZE	CAGE CODE	DRAWING NO	RESTRICTED TO
A2	00779	C-DRC26-50SXX	-

CUSTOMER DRAWING | SCALE 3:2 | SHEET 1 OF 1 | REV B

1471-9 (3/13)