THIS DRAWING IS UNPUBLISHED. RELEASED FOR PUBLICATION AUGUST ,2005.
© COPYRIGHT 2005 By – ALL RIGHTS RESERVED.

LOC	DIST
E	B

REVISIONS

P	LTR	DESCRIPTION	DATE	DWN	APVD
	B1	REVISED PER ECO-11-005033	31MAR11	RK	HMR
	C	REVISED PER ECO-12-002190	03FEB12	TITAN	MARTIN

NOTES

1. 100 TRAY PACK IN ACCORDANCE WITH AMP SPEC 107-3275
2. SINGLE PACK IN ACCORDANCE WITH AMP SPEC 107-3275
3. Au PLATING OVER Ni PLATING OVER Cu PLATING
4. Ni PLATING OVER Cu PLATING
5. FOR TECHNICAL DATA REFER TO YOUR LOCAL TE CONNECTIVITY SALES OFFICE
6. ALL DIMENSIONS ARE NOMINAL FOR REFERENCE ONLY UNLESS OTHERWISE STATED

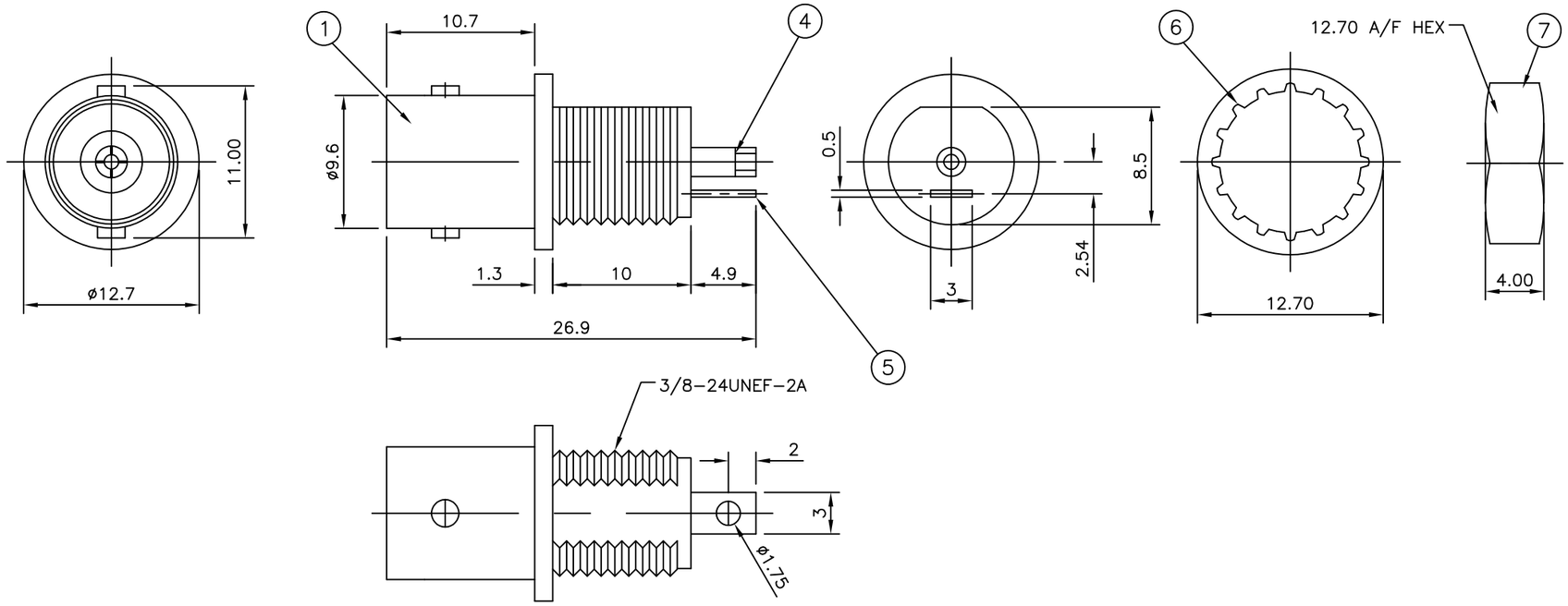

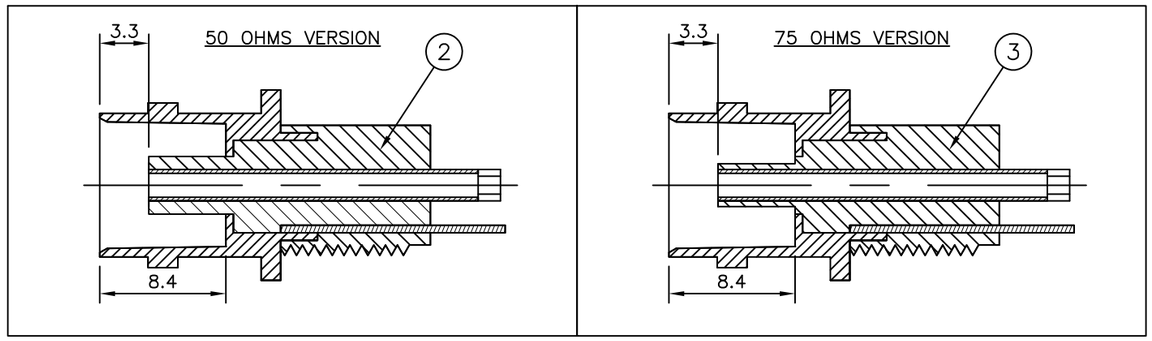

				OBSOLETE			OBSOLETE			
				1	1	1	1	BRASS 4	HEX NUT	7
				1	1	1	1	STEEL 4	LOCK WASHER	6
				1	1	1	1	BRASS 4	GROUND TAG	5
				1	1	1	1	PHOS BRONZE 3	CONTACT	4
				1	1	–	–	PBT POLYESTER	INSULATOR	3
				–	–	1	1	PBT POLYESTER	INSULATOR	2
				1	1	1	1	ZINC ALLOY 4	BODY	1
				5--3	5--2	5--1	5--0	MATERIAL	DESCRIPTION	ITEM
				1	2	2	1			
QUANTITY PER ASSY								PARTS LIST		

RECOMMENDED MOUNTING HOLE
MAX PANEL THICKNESS: X.Xmm

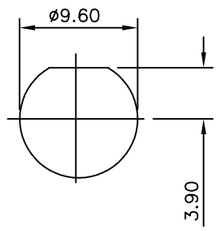

THIS DRAWING IS A CONTROLLED DOCUMENT.

DIMENSIONS: mm

TOLERANCES UNLESS OTHERWISE SPECIFIED:

0 PLC	± 0.5
1 PLC	± 0.3
2 PLC	± 0.2
3 PLC	± –
4 PLC	± –
ANGLES	± –

MATERIAL: SEE TABLE

FINISH: SEE TABLE

DWN	RITA ZUO	24 Feb 09
CHK	ANSON MA	24 Feb 09
APVD	BOB ZHAO	24 Feb 09
PRODUCT SPEC	108-112000	
APPLICATION SPEC	–	
WEIGHT	–	

TE Connectivity

NAME: BNC INSULATED BULKHEAD SOCKET FRONT MOUNT – –

SIZE	CAGE CODE	DRAWING NO	RESTRICTED TO
A3	00779	C-1634504	–

CUSTOMER DRAWING | SCALE NTS | SHEET 1 OF 1 | REV C