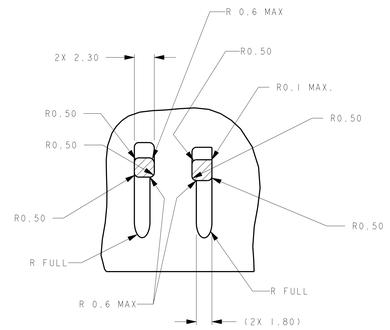

SECTION C-C
SCALE 4:1

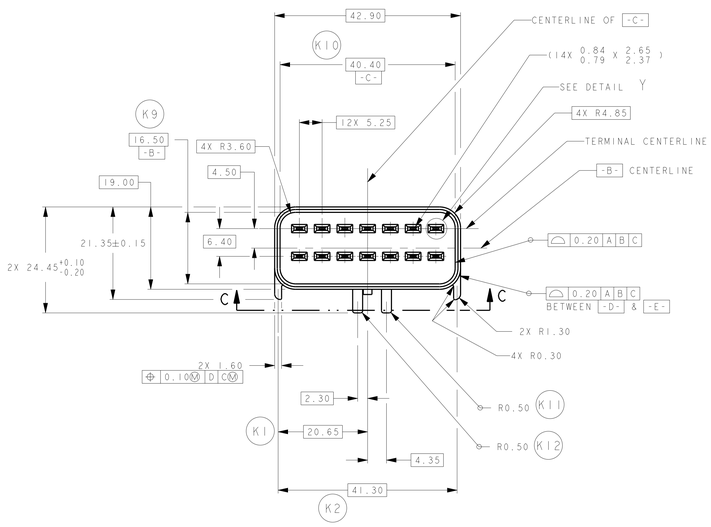

POLARIZING OPTION
TYPE "A" SHOWN
DIMENSIONS FOR OTHER OPTIONS
SAME EXCEPT AS SHOWN

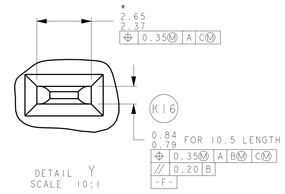

DETAIL Y
SCALE 10:1

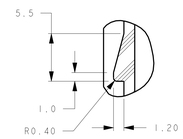

DETAIL Z
SCALE 4:1

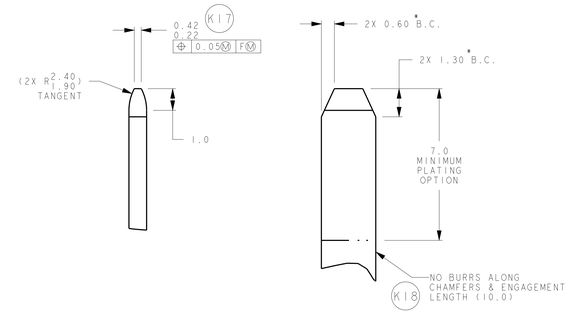

MALE TERMINAL (ENGAGEMENT AREA)

* B.C. INDICATES BEFORE COINING

MUST BE APPROVED BY ENGINEERING:

BASE MATERIAL - HIGH CONDUCTIVITY COPPER ALLOY (>80%)

PLATING NOTES (CONTACT AREA)

TIN (125°C MAXIMUM CONTINUOUS TEMPERATURE)

A. HOT TIN DIP 0.5um TO 2um (20uin TO 80uin)
OR
B. POST ELECTRO MATTE TIN
BARRIER PLATE (OPTIONAL FOR SOLDERABILITY) - UNDERPLATE
WITH COPPER 2.5um (100uin) MIN. THICKNESS
TOP LAYER 5.0um±2.5um (200uin±100uin) TIN
PER ASTM B-545-83

PRECIOUS METAL: WHEN SPECIFIED (PER USCAR EWCAP PLATING REQUIREMENTS)

BARRIER PLATE - (OPTIONAL FOR SOLDERABILITY) UNDERPLATE
WITH COPPER 2.5um (100uin) MIN THICKNESS PER ATSM __ TBD

INTERMEDIATE LAYER #1 SULFAMATE DUCTILE NICKEL 1.27um - 2.5um
(50uin - 100uin) THICK PER ASTM B699 TYPE 2

INTERMEDIATE LAYER #2 OPTIONAL 1.0um (40uin) MIN THICKNESS
PALLADIUM ELECTROPLATE PER ASTM B_TBD

TOP LAYER 0.1um (4uin) MIN THICKNESS HARD GOLD OVER LAYER #2
0.5um (20uin) MIN THICKNESS HARD GOLD IF LAYER #2 IS NOT
APPLIED, PER ASTM B _TBD

FOR HEAVY DUTY DIESEL ENGINES: WHEN SPECIFIED

TOP LAYER 1.27um (50uin) MIN THICKNESS HARD GOLD ELECTROPLATE
PER ASTM B-488 TYPE 2 CODE "C" OVER INTERMEDIATE LAYER #1

OR

INTERMEDIATE LAYER #2 1.27um (50uin) MIN THICKNESS
PALLADIUM ELECTROPLATE

TOP LAYER 0.05um (2uin) MIN THICKNESS HARD GOLD ELECTROPLATE

NOTE: ABOVE NOTES RELATING TO MATERIAL AND PLATING ARE FOR REFERENCE ONLY. PARTS MUST BE VALIDATED TO CUSTOMER REQUIREMENTS.

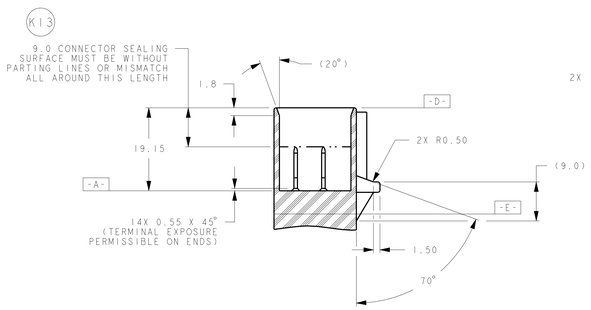

SECTION B-B

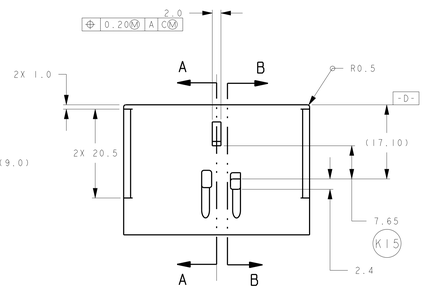

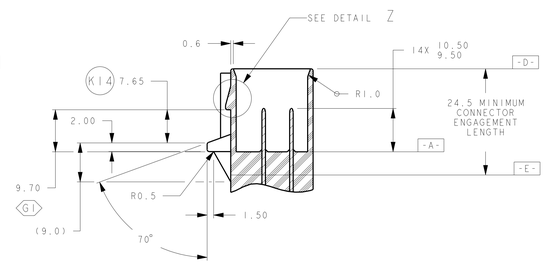

SECTION A-A

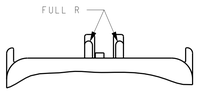

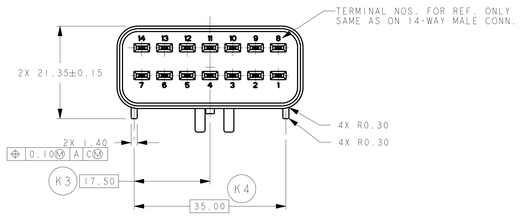

TYPE B

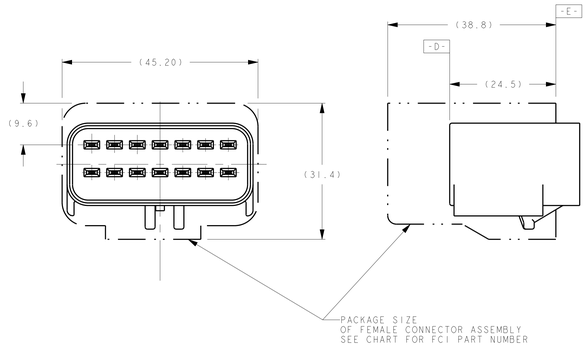

PACKAGE VIEWS FOR REFERENCE ONLY

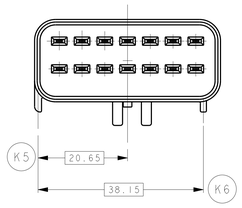

TYPE C

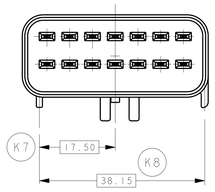

TYPE D

NOTE: POLARIZATION KEY DETAILS
PER A & B POLARIZATIONS EXCEPT AS SHOWN

54201452	UN-SEALED	NATURAL	G36014-D TYPE D
54201403	UN-SEALED		
54201414	SEALED		
54201402	UN-SEALED	DK. GRAY	G36014-C TYPE C
54201413	SEALED		
54201401	UN-SEALED	LT. GRAY	G36014-B TYPE B
54201412	SEALED		
54201443	SEALED	BLACK	G36014-A TYPE A
54201419	SEALED		
54201400	UN-SEALED		
54201442	UN-SEALED		
54201411	SEALED		
MATES WITH 14 WAY FEMALE	SEALED OR UN-SEALED	COLOR	POLARIZATION OPTION

K INDICATES IN - PROCESS INSPECTION FOR MANUFACTURING DIMENSION(S) OR SPECIFICATION(S): 19

WIRING FABRICATORS MUST PURCHASE FROM ENGINEERING APPROVED SOURCES

MATES WITH 14 WAY FEMALE INSULATOR
SEE CHART

UNLESS OTHERWISE SPECIFIED TOLERANCES
ARE AS FOLLOWS:

2 PLACE DIMENSIONS ±0.10
1 PLACE DIMENSIONS ±0.25
ANGULAR ±2°

DRAFT PERMISSIBLE WITHIN DIMENSIONAL TOLERANCE
ONLY UNLESS OTHERWISE SPECIFIED

MUST CONFORM TO USCAR-2

R 0.15 MAXIMUM ON CORNERS AND FILLETS
SHOWN AS SHARP

PART TO BE MOLDED FREE FROM FLASH, VOIDS, STRESSES,
IMPERFECTIONS, AND TOOL MARKS, THAT AFFECT FUNCTION,
OR HANDLING OF THE PART

ALL EJECTOR MARKS 0.10 MAXIMUM HIGH TO
0.25mm BELOW THE SURFACE OF THE PART

TOOL MUST BE INTERCHANGEABLE TO PRODUCE
ALL KEY TYPES AS CHARTED UNLESS OTHERWISE SPECIFIED

G DENOTES GAGE REQUIREMENTS FOR USER AND MANUFACTURER

K19 PLATE BLADE TERMINAL PER ABOVE NOTES

REFERENCE: CHRYSLER DRAWING NO. 04707029

ECN-NUMBER	DATE	REVISION	ZONE	CHANGE DESCRIPTION	DRAWN BY	CHK. BY	APPR. BY
11524	7-19-10	E1	ALL	RELEASED DIRECT CONNECT DRAWING ON FCI TITLE BLOCK	RA	SSS	SSS

PRODUCT SPEC: APEX 2.8
PACKAGING SPEC: -
APPLICATION SPEC: -
THIS DRAWING AND ALL OTHER INFORMATION CONTAINED THEREIN IS PROPRIETARY AND THE PROPERTY OF FCI. This drawing may not be copied, reproduced or disclosed to any third party without the expressed written permission of FCI. © FCI April 1999
TOLERANCES: 2 PLACE DIM ±0.10; 1 PLACE DIM ±0.25; ANGULAR DIM ±2°
MATERIAL: SEE NOTES
SURFACE FINISH: -
CONFORM NO.: HS9008
COLOR: SEE CHART
3RD ANGLE
CAD SYSTEM: pro / eng
DO NOT SCALE DRAWING
TOOL NO.: REF DWG.
DO Lic. Code: N.A.
DIMENSION IN MILLIMETERS
IMP. SYS: A0
UNIT: 1:1

	DATE	NAME
DRAWN BY	8-14-00	G. TALLMAN
CHECKED BY	8-20-00	SUCHA SIAN
APPROVED BY	-	SUCHA SIAN

TITLE: FCI 2.8MM DIRECT CONNECT INTERFACE SPECIFICATION 14-WAY MALE
DRAWING NUMBER: G36014
CUSTOMER NO.: 6243
CAT. NO.: -
FILE NAME: G36014.DWG
SHEET: 2:1