EH2500ETTTS-12.288M TR

Click part number to visit Part Number Details page

Ecliptek

REGULATORY COMPLIANCE (Data Sheet downloaded on Mar 9, 2019)

Lead Free COMPLIANT | EU RoHS 2011/65 + 2015/863 COMPLIANT | China RoHS COMPLIANT | REACH 191 SVHC COMPLIANT

Click badges to download compliance docs

Regulatory Compliance standards are subject to updates by governing bodies. Click the badges to download the latest compliance docs for this part number directly from Ecliptek.

DRC CONFLICT FREE

ITEM DESCRIPTION

Quartz Crystal Clock Oscillators XO (SPXO) HCMOS/TTL (CMOS) 5.0Vdc 4 Pad 5.0mm x 7.0mm Ceramic Surface Mount (SMD) 12.288MHz ±100ppm -40°C to +85°C

ELECTRICAL SPECIFICATIONS

Nominal Frequency	12.288MHz
Frequency Tolerance/Stability	±100ppm Maximum (Inclusive of all conditions: Calibration Tolerance at 25°C, Frequency Stability over the Operating Temperature Range, Supply Voltage Change, Output Load Change, First Year Aging at 25°C, Shock, and Vibration)
Aging at 25°C	±5ppm/year Maximum
Operating Temperature Range	-40°C to +85°C
Supply Voltage	5.0Vdc ±10%
Input Current	50mA Maximum (No Load)
Output Voltage Logic High (Voh)	2.4Vdc Minimum with TTL Load, Vdd-0.4Vdc Minimum with HCMOS Load (IOH= -16mA)
Output Voltage Logic Low (Vol)	0.4Vdc Maximum with TTL Load, 0.5Vdc Maximum with HCMOS Load (IOL= +16mA)
Rise/Fall Time	6nSec Maximum (Measured at 0.8Vdc to 2.0Vdc with TTL Load; Measured at 20% to 80% of waveform with HCMOS Load)
Duty Cycle	50 ±5(%) (Measured at 50% of waveform with TTL Load or with HCMOS Load)
Load Drive Capability	10TTL Load or 50pF HCMOS Load Maximum
Output Logic Type	CMOS
Pin 1 Connection	Tri-State (High Impedance)
Tri-State Input Voltage (Vih and Vil)	+2.2Vdc Minimum to enable output, +0.8Vdc Maximum to disable output (High Impedance), No Connect to enable output.
Absolute Clock Jitter	±250pSec Maximum, ±100pSec Typical
One Sigma Clock Period Jitter	±50pSec Maximum, ±30pSec Typical
Start Up Time	10mSec Maximum
Storage Temperature Range	-55°C to +125°C

ENVIRONMENTAL & MECHANICAL SPECIFICATIONS

ESD Susceptibility	MIL-STD-883, Method 3015, Class 1, HBM: 1500V
Fine Leak Test	MIL-STD-883, Method 1014, Condition A
Flammability	UL94-V0
Gross Leak Test	MIL-STD-883, Method 1014, Condition C
Mechanical Shock	MIL-STD-883, Method 2002, Condition B
Moisture Resistance	MIL-STD-883, Method 1004
Moisture Sensitivity	J-STD-020, MSL 1
Resistance to Soldering Heat	MIL-STD-202, Method 210, Condition K
Resistance to Solvents	MIL-STD-202, Method 215
Solderability	MIL-STD-883, Method 2003
Temperature Cycling	MIL-STD-883, Method 1010, Condition B
Vibration	MIL-STD-883, Method 2007, Condition A

Ecliptek, LLC 5458 Louie Lane, Reno, NV 89511 1-800-ECLIPTEK or 714.433.1200

EH2500ETTTS-12.288M TR

Click part number to visit Part Number Details page

MECHANICAL DIMENSIONS (all dimensions in millimeters)

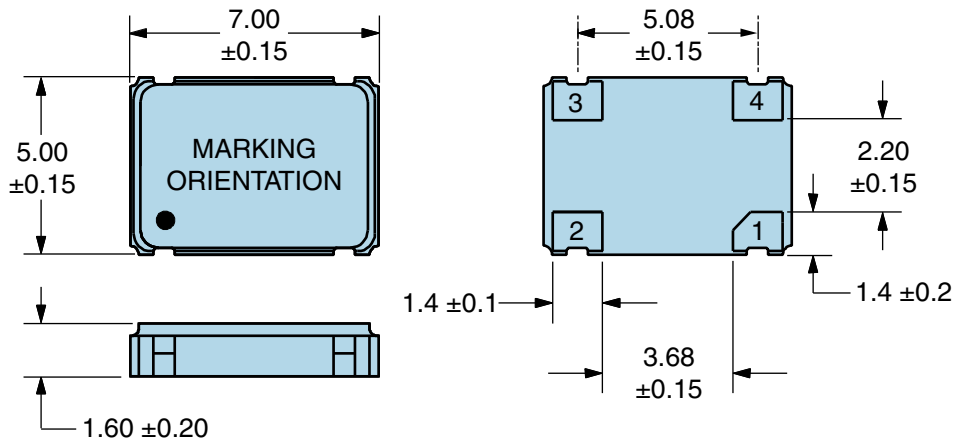

PIN	CONNECTION
1	Tri-State
2	Ground
3	Output
4	Supply Voltage

LINE	MARKING
1	**ECLIPTEK**
2	**12.288M**
3	**XXXXX** *XXXXX=Ecliptek Manufacturing Identifier*

Suggested Solder Pad Layout

All Dimensions in Millimeters

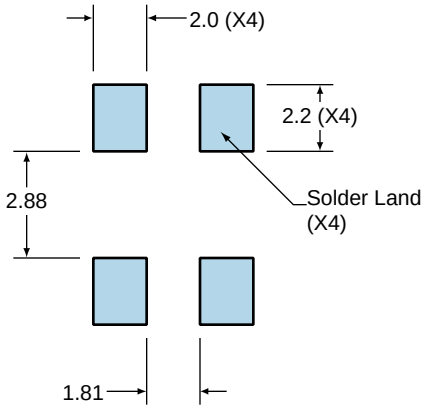

All Tolerances are ±0.1

Ecliptek, LLC 5458 Louie Lane, Reno, NV 89511 1-800-ECLIPTEK or 714.433.1200

EH2500ETTTS-12.288M TR

Click part number to visit Part Number Details page

OUTPUT WAVEFORM & TIMING DIAGRAM

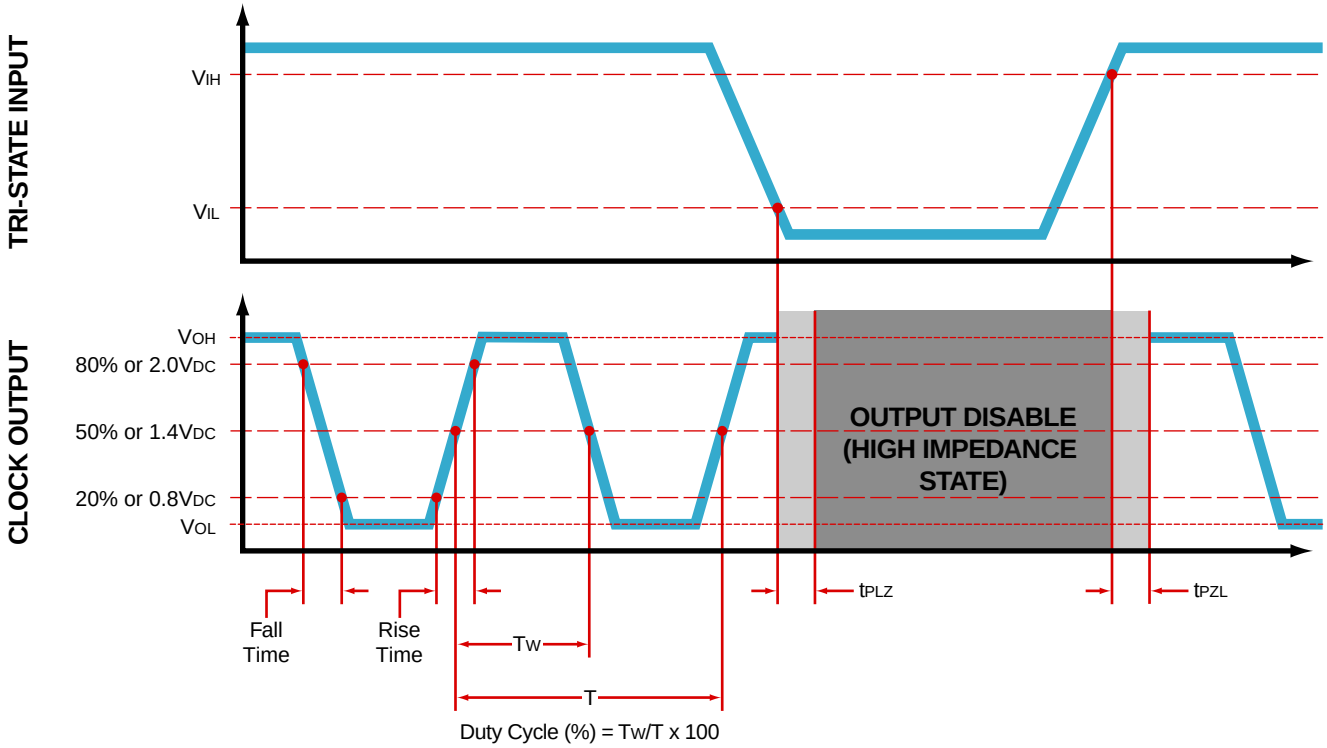

Ecliptek, LLC 5458 Louie Lane, Reno, NV 89511 1-800-ECLIPTEK or 714.433.1200

EH2500ETTTS-12.288M TR

Click part number to visit Part Number Details page

Test Circuit for TTL Output

Output Load Drive Capability	R_L Value (Ohms)	C_L Value (pF)
10TTL	390	15
5TTL	780	15
2TTL	1100	6
10LSTTL	2000	15
1TTL	2200	3

Table 1: R_L Resistance Value and C_L Capacitance Value Vs. Output Load Drive Capability

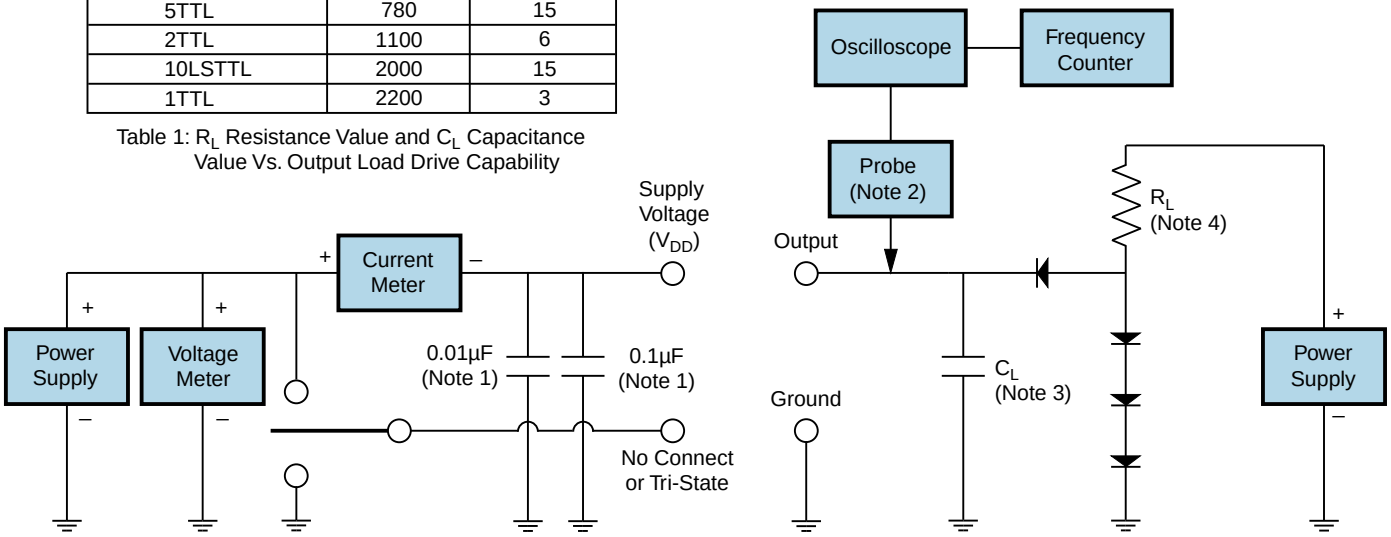

Note 1: An external 0.1µF low frequency tantalum bypass capacitor in parallel with a 0.01µF high frequency ceramic bypass capacitor close to the package ground and V_{DD} pin is required.
Note 2: A low capacitance (<12pF), 10X attenuation factor, high impedance (>10Mohms), and high bandwidth (>300MHz) passive probe is recommended.
Note 3: Capacitance value C_L includes sum of all probe and fixture capacitance.
Note 4: Resistance value R_L is shown in Table 1. See applicable specification sheet for 'Load Drive Capability'.
Note 5: All diodes are MMBD7000, MMBD914, or equivalent.

Ecliptek, LLC 5458 Louie Lane, Reno, NV 89511 1-800-ECLIPTEK or 714.433.1200

EH2500ETTTS-12.288M TR

Click part number to visit Part Number Details page

Test Circuit for CMOS Output

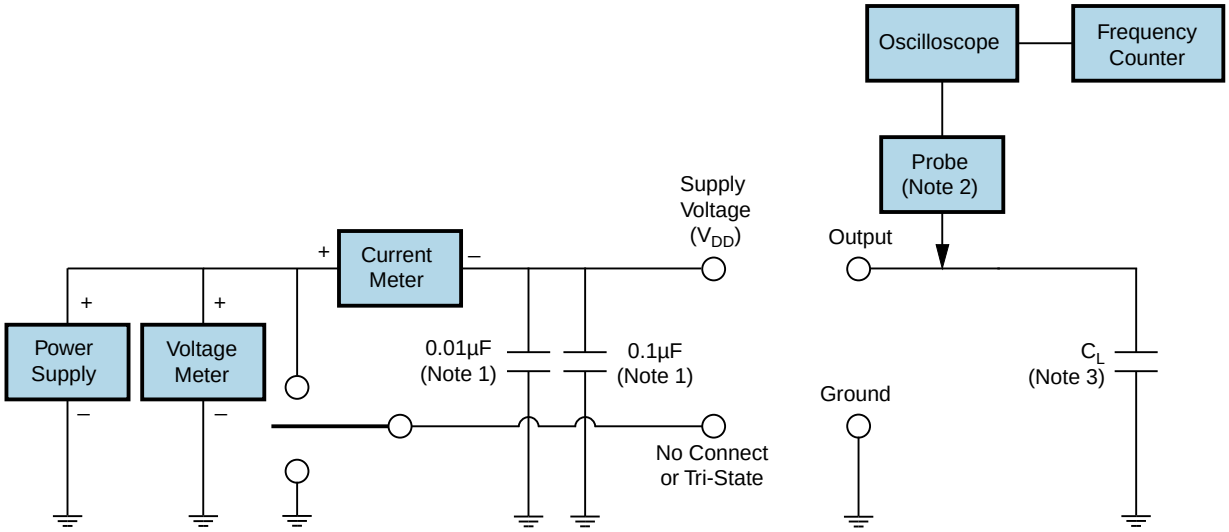

Note 1: An external 0.1µF low frequency tantalum bypass capacitor in parallel with a 0.01µF high frequency ceramic bypass capacitor close to the package ground and V_{DD} pin is required.
Note 2: A low capacitance (<12pF), 10X attenuation factor, high impedance (>10Mohms), and high bandwidth (>300MHz) passive probe is recommended.
Note 3: Capacitance value C_L includes sum of all probe and fixture capacitance.

Ecliptek, LLC 5458 Louie Lane, Reno, NV 89511 1-800-ECLIPTEK or 714.433.1200

EH2500ETTTS-12.288M TR

Tape & Reel Dimensions

Quantity Per Reel: 1,000 units

All Dimensions in Millimeters

Compliant to EIA-481

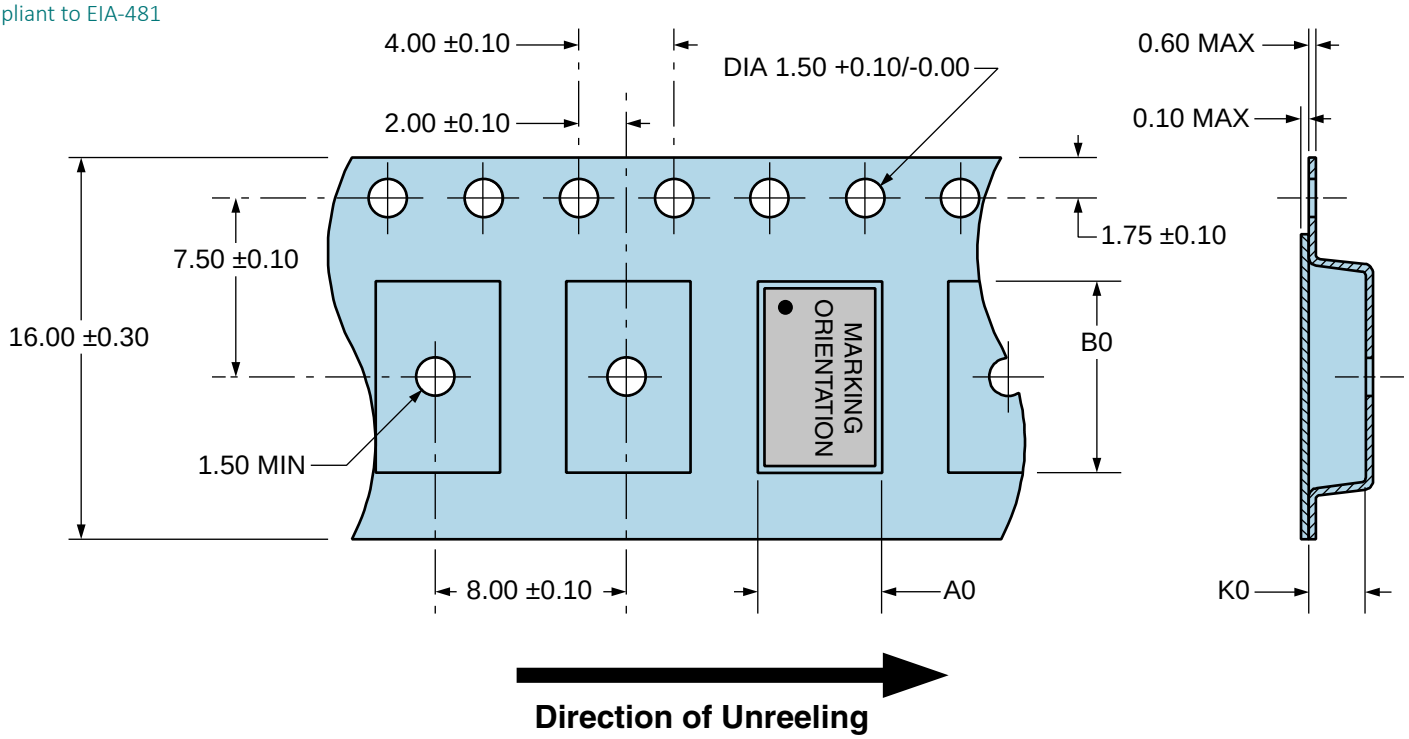

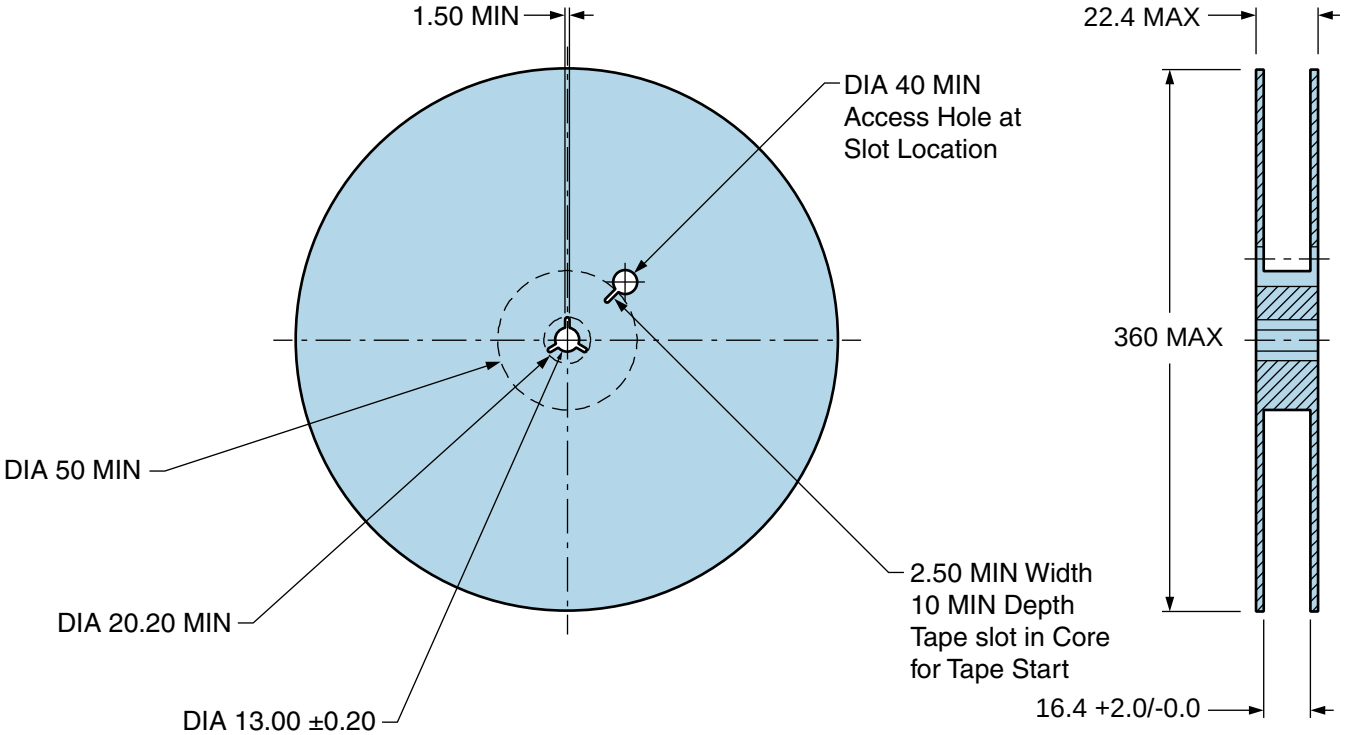

Ecliptek, LLC 5458 Louie Lane, Reno, NV 89511 1-800-ECLIPTEK or 714.433.1200

EH2500ETTTS-12.288M TR

Click part number to visit Part Number Details page

Ecliptek

Recommended Solder Reflow Methods

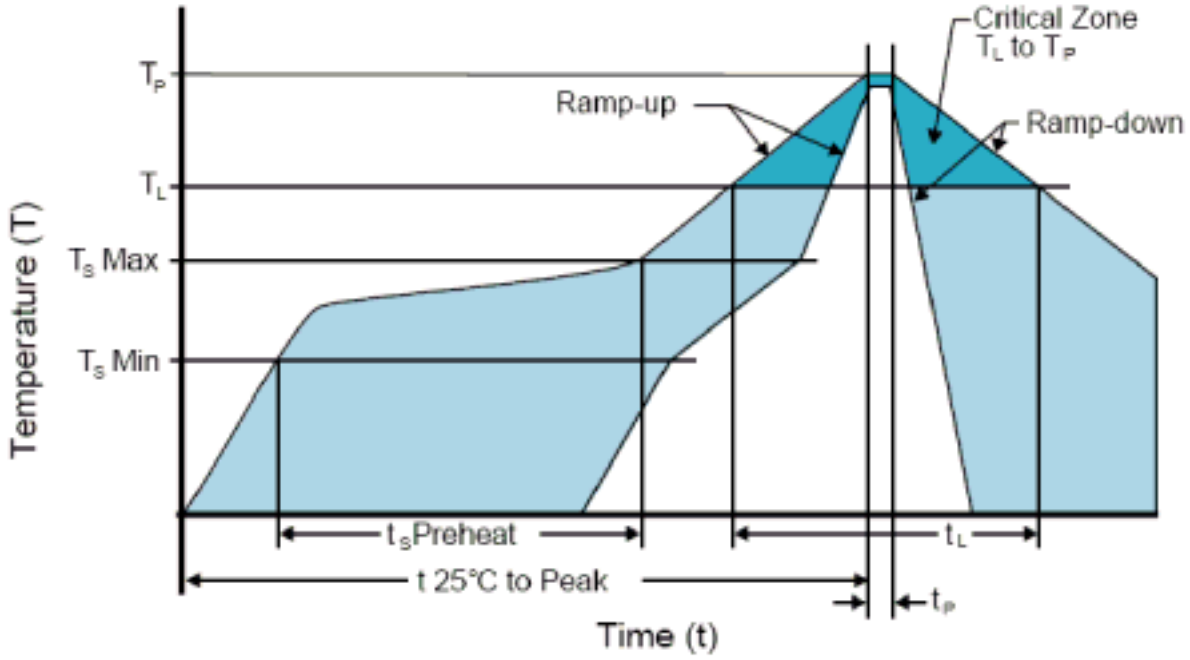

High Temperature Infrared/Convection

T_S MAX to T_L (Ramp-up Rate)	3°C/Second Maximum
Preheat	
- Temperature Minimum (T_S MIN)	150°C
- Temperature Typical (T_S TYP)	175°C
- Temperature Maximum (T_S MAX)	200°C
- Time (t_S MIN)	60 - 180 Seconds
Ramp-up Rate (T_L to T_P)	3°C/Second Maximum
Time Maintained Above:	
- Temperature (T_L)	217°C
- Time (t_L)	60 - 150 Seconds
Peak Temperature (T_P)	260°C Maximum for 10 Seconds Maximum
Target Peak Temperature (T_P Target)	250°C +0/-5°C
Time within 5°C of actual peak (t_p)	20 - 40 Seconds
Ramp-down Rate	6°C/Second Maximum
Time 25°C to Peak Temperature (t)	8 Minutes Maximum
Moisture Sensitivity Level	Level 1
Additional Notes	Temperatures shown are applied to body of device.

Ecliptek, LLC 5458 Louie Lane, Reno, NV 89511 1-800-ECLIPTEK or 714.433.1200

EH2500ETTTS-12.288M TR

Click part number to visit Part Number Details page

Ecliptek

Recommended Solder Reflow Methods

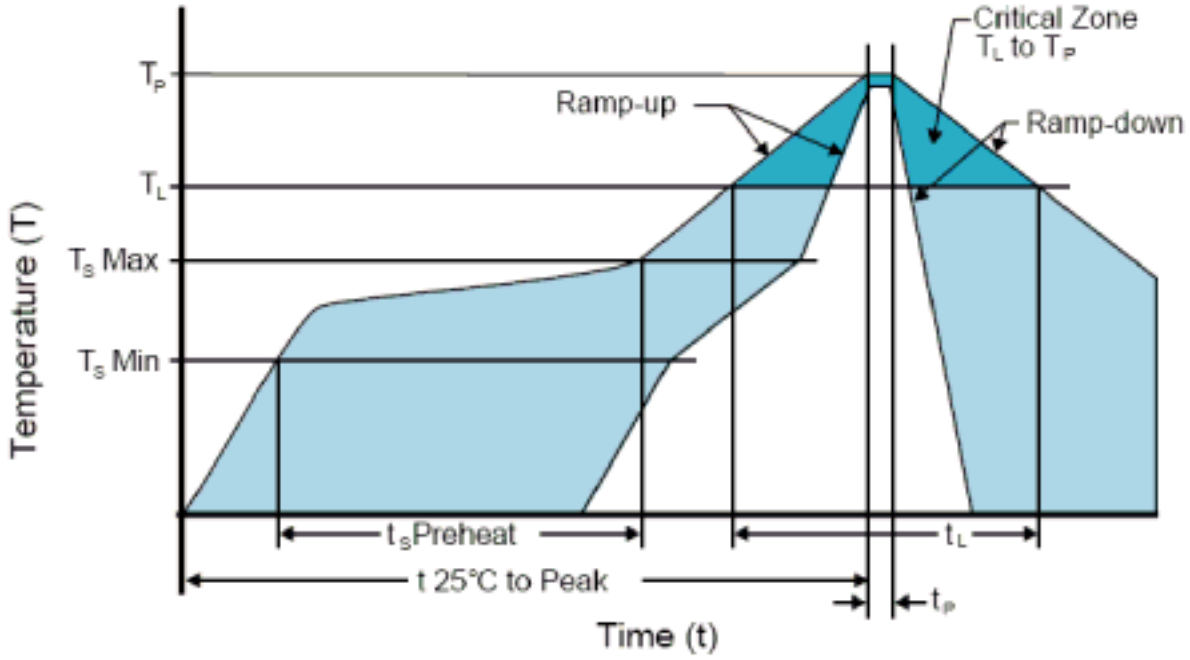

Low Temperature Infrared/Convection 240°C

T_S MAX to T_L (Ramp-up Rate)	5°C/Second Maximum
Preheat	
- Temperature Minimum (T_S MIN)	N/A
- Temperature Typical (T_S TYP)	150°C
- Temperature Maximum (T_S MAX)	N/A
- Time (t_S MIN)	60 - 120 Seconds
Ramp-up Rate (T_L to T_P)	5°C/Second Maximum
Time Maintained Above:	
- Temperature (T_L)	150°C
- Time (t_L)	200 Seconds Maximum
Peak Temperature (T_P)	240°C Maximum
Target Peak Temperature (T_P Target)	240°C Maximum 2 Times / 230°C Maximum 1 Time
Time within 5°C of actual peak (t_P)	10 Seconds Maximum 2 Times / 80 Seconds Maximum 1 Time
Ramp-down Rate	5°C/Second Maximum
Time 25°C to Peak Temperature (t)	N/A
Moisture Sensitivity Level	Level 1
Additional Notes	Temperatures shown are applied to body of device.

Low Temperature Manual Soldering

185°C Maximum for 10 Seconds Maximum, 2 times Maximum. (Temperatures shown are applied to body of device.)

High Temperature Manual Soldering

260°C Maximum for 5 Seconds Maximum, 2 times Maximum. (Temperatures shown are applied to body of device.)

Ecliptek, LLC 5458 Louie Lane, Reno, NV 89511 1-800-ECLIPTEK or 714.433.1200