REVISIONS			
REV	DESCRIPTION	DATE	APPROVED
05_1	REVISED	4/18/96	

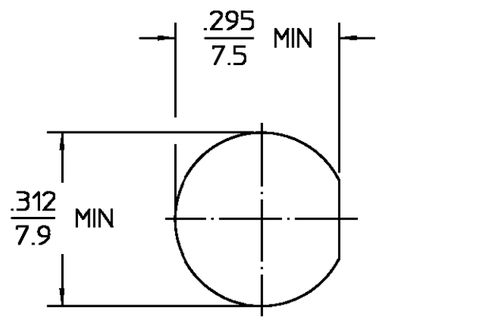

RECOMMENDED MOUNTING HOLE

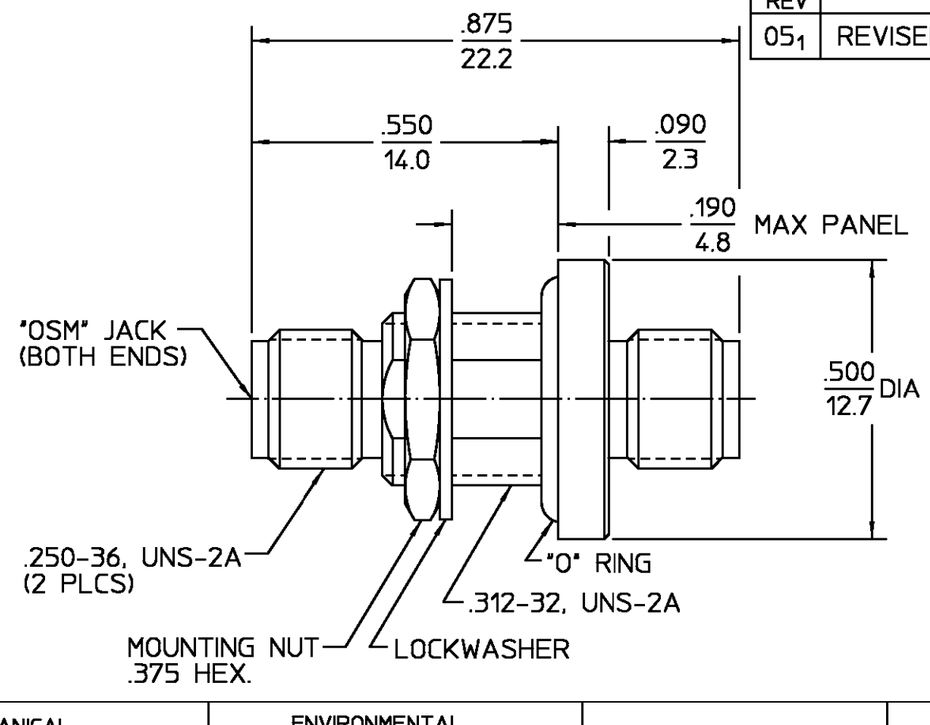

.XXX = in
XX.X = mm

ELECTRICAL	MECHANICAL	ENVIRONMENTAL
Nominal Impedance (Ohms) 50	Interface Dimensions MIL-STD-348, Fig. 310.2	Temperature Rating -65°C To 165°C
Frequency Range (GHz) DC to 12.4	Recommended Mating Torque N/A	Vibration MIL-STD-202, Method 204, Condition D
Volt Rating (VRMS MAX) @ Sea Level 335	Mating Characteristics: Insertion (MAX Lbs) 3.0	Shock MIL-STD-202, Method 213, Condition I
VSWR 1.10 + .015f(GHz)	Withdrawal (MIN Oz) 1.0	Thermal Shock MIL-STD-202, Method 107, Condition C
Insertion Loss (dB MAX) .15 $\sqrt{f}$ @ 6GHz	Force to Engage and Disengage (In/Lbs MAX) 2.0	Moisture Resistance MIL-STD-202, Method 106, Except Vibration Shall Be Omitted 200 Megaohms MIN
RF Leakage (dB MIN) -[60-f(GHz)]	Center Contact Captivation Axial (Lbs) 6.0	Corrosion - MIL-STD-202, Method 101, Condition B, 5% salt spray
Corona, 70,000 Ft (VRMS MIN) 250	Radial (In/Oz) N/A	
Dielectric Withstanding Voltage (VRMS MIN) @ Sea Level 1000	Cable Retention Axial Force (Lbs) N/A	
Contact Resistance (Milliohms MAX) Center Contact 8.0	Torque (In/Oz) N/A	
Outer Contact 4.0	Weight (Grams) TBD	
Cable to Housing N/A		
RF High Potential @ Sea Level (VRMS MIN @ 5 MHz) 670		
I.R.(Megohms MIN) 5,000		

COMPONENT	MATERIAL	FINISH
HOUSING	STAINLESS STEEL PER ASTM-A484 AND ASTM-A582, TYPE 303	PASSIVATE PER QQ-P-35
DIELECTRIC	TFE FLUOROCARBON PER ASTM-D-1457	N/A
CENTER CONTACT	BERYLLIUM COPPER PER ASTM-B-196 OR ASTM-B-197 ALLOY C17300, CONDITION H	GOLD PLATE PER MIL-G-45204

UNLESS OTHERWISE SPECIFIED DIMENSIONS ARE IN INCHES
TOLERANCE ON
FRAC. ± 1/64 DEC. ±.005 ANGLES ± 1°

DRAWN BY	BWC	DATE 6-2-82
CHECKED BY	PRB	11-8-82
APP'D BY	DN	11-8-82

AMP

AMP Incorporated
140 Fourth Avenue
Waltham, MA 02451-7599

These drawings and specifications are the property of M/A-COM Incorporated and shall not be reproduced or copied or used in whole or in part as the basis for the manufacture or sale of item(s) without written permission.

USE ASS'Y PROCEDURE

NO. A.P. N/A

TITLE "OSM" FEEDTHRU BULKHEAD JACK TO JACK ADAPTER M55339/28-30001

SIZE	CODE IDENT NO.		REV
B	26805	2084-8001-92	05_1
SCALE 4:1			SHEET 1 OF 1

CUSTOMER DRAWING

AMP PART # 1054986-1
SHEET 1 OF 1 REV A