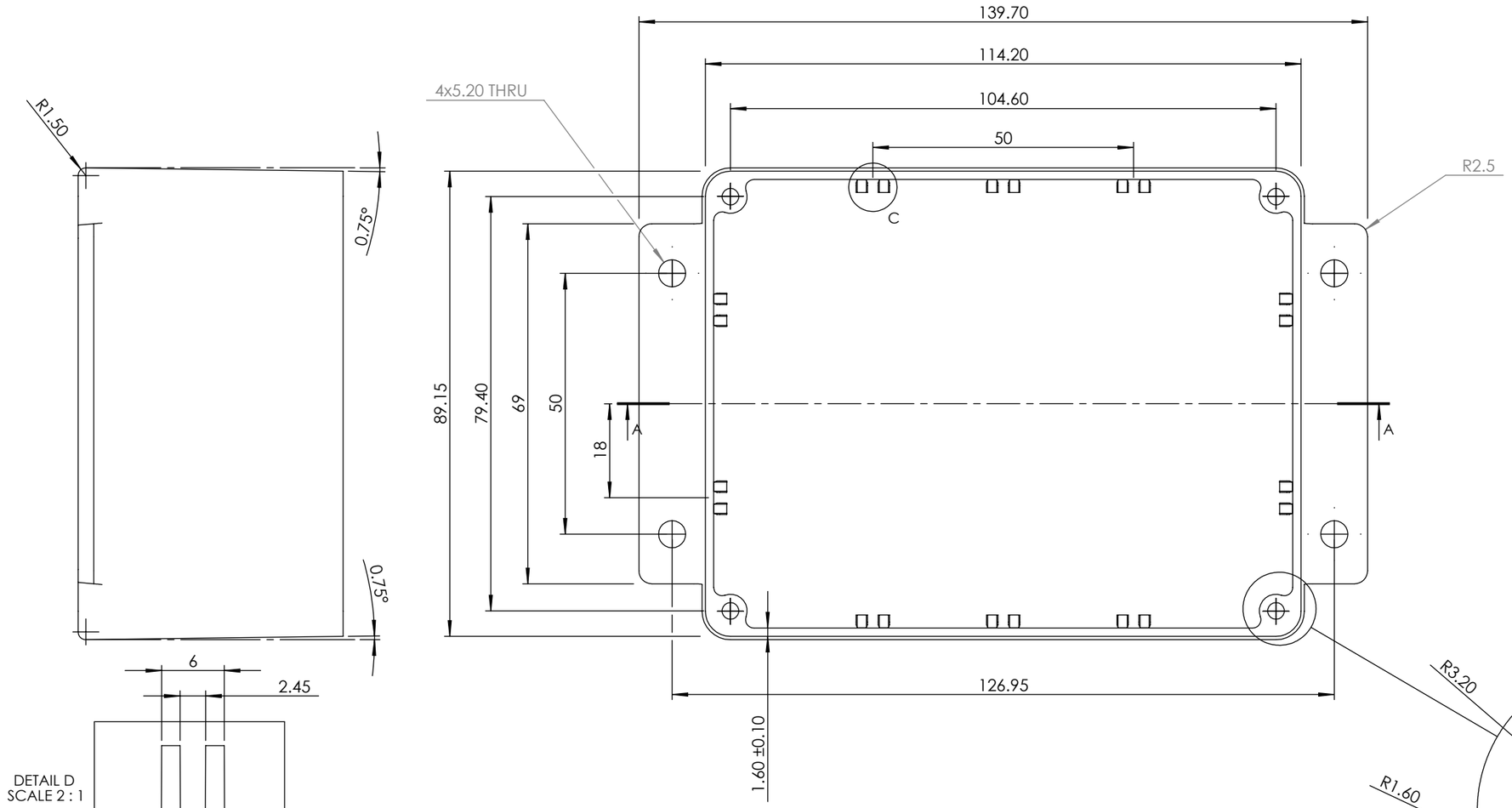

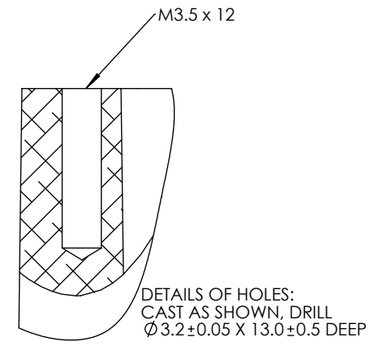

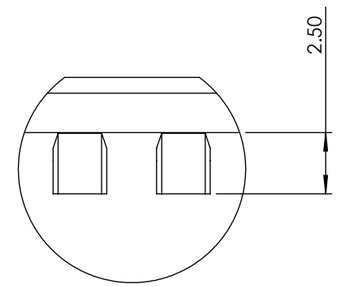

DETAIL C
SCALE 4 : 1

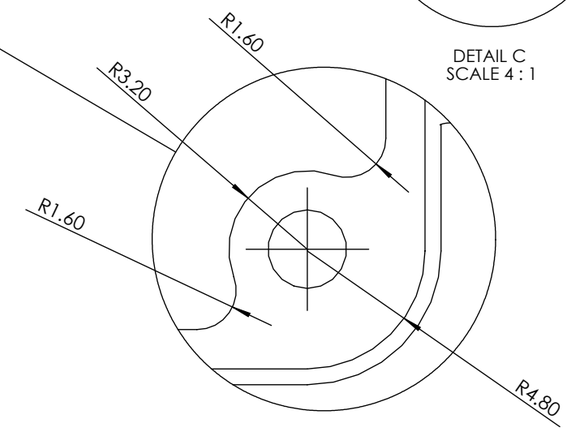

DETAIL B
SCALE 4 : 1

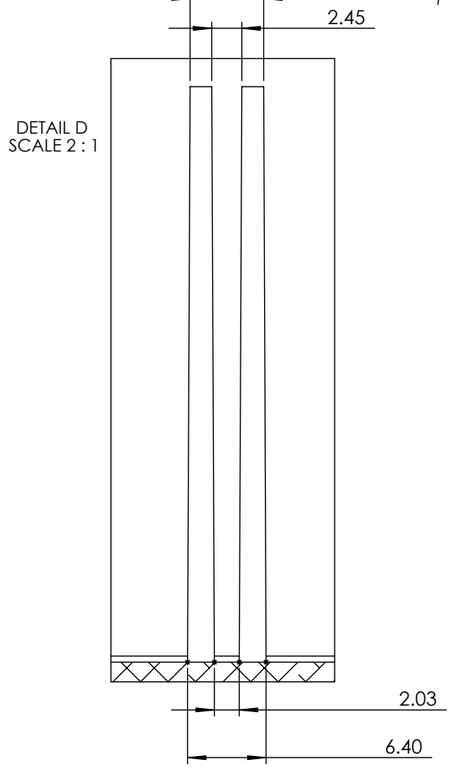

DETAIL D
SCALE 2 : 1

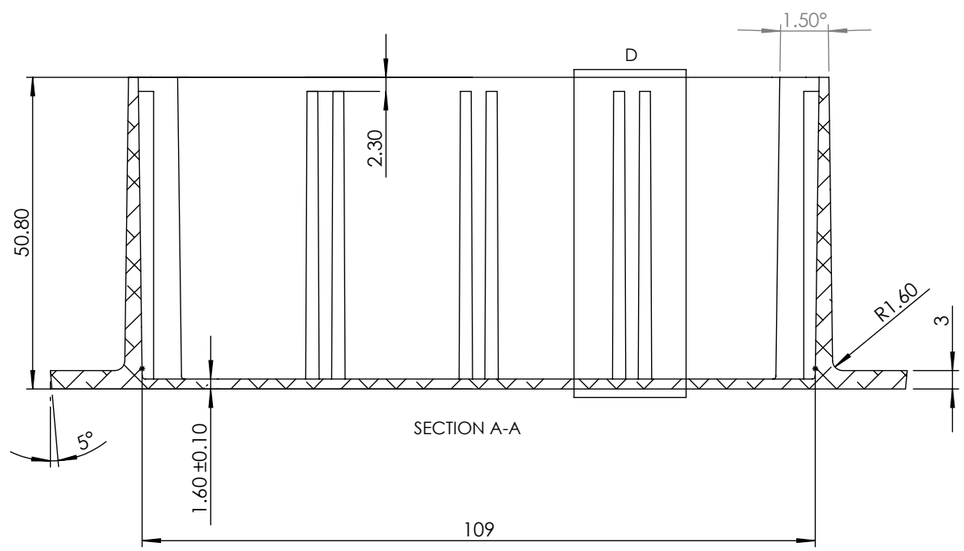

SECTION A-A

		FLANGED	
SIZE	PLAIN	POWDER COATED	NYLON COATED
C	455-0030	457-0030	458-0030
	SEALED	FLANGED	
C	456-0030	463-0030	464-0030

Tel No.+44(0)1724273200 Website www.dem-uk.com

Alpha3 manufacturing · ROXBURGH EMC · DELTRON Components · DELTRON Enclosures · b·e·s Media

PROPRIETARY AND CONFIDENTIAL
THE INFORMATION CONTAINED IN THIS DRAWING IS THE SOLE PROPERTY OF **ALPHA 3 MANUFACTURING**.
ANY REPRODUCTION IN PART OR AS A WHOLE WITHOUT THE WRITTEN PERMISSION OF **ALPHA 3 MANUFACTURING** IS PROHIBITED.

DEM

DEM Manufacturing, Deltron Emcon House
Hargreaves Way, Sawcliffe Ind. Park,
Scunthorpe, North Lincolnshire, DN15 8RF, UK

UNLESS OTHERWISE SPECIFIED:
DIMENSIONS ARE IN MILLIMETRES
LINEAR TOLERANCE:
NO DECIMAL PLACES ±0.5mm
1 DECIMAL PLACE ±0.25mm
2 DECIMAL PLACES ±0.125mm
ANGULAR TOLERANCE: ±1°

FINISH . . .

DEBURR AND BREAK SHARP EDGES

IF IN DOUBT ASK
DO NOT SCALE DRAWING

MATERIAL: DieCast Aluminium Alloy

DRAWN BY: B.SILLENCE
APPROVED BY: B.SILLENCE
THIRD ANGLE PROJECTION
SHEET 1 OF 1
SCALE 1:1
A3

TITLE: PROCUREMENT SPECIFICATION FOR 'C' FLANGED BOX

DRAWING NO.: C BOX FLANGED

ISSUE: 02
Release