AZ2500

60 AMP LATCHING POWER RELAY

FEATURES

- Low cost
- 60 Amp switching
- Heavy loads to 15000 VA
- 4 kV dielectric
- Epoxy sealed construction available
- UL, CUR file E43203

CONTACTS

Arrangement	SPST (1 Form A)
Ratings	Resistive load: Max. switched power: 15000 VA Max. switched current: 60 A Max. switched voltage: 400 VAC
Rated Load UL, CUR	60 A at 250 VAC, 6k cycles, General Use 50 A at 250 VAC, 10k cycles, General Use 40 A at 250 VAC, 100k cycles, General Use
Material	Silver cadmium oxide or silver tin oxide
Resistance	< 50 milliohms initially (24 V, 1 A voltage drop method)

COIL

Power **At Pickup Voltage (typical)**	666 mW single coil 1.3 W dual coil
Temperature	Max. 105°C (221°F)

NOTES

1. All values at 20°C (68°F).
2. Relay may pull in with less than “Must Operate” value.
3. Specifications subject to change without notice.
4. Allow suitable slack on leads when wiring, and do not subject the terminals to excessive force.

GENERAL DATA

Life Expectancy **Mechanical** **Electrical**	Minimum operations 1×10^6 1×10^5 at 40 A 250 VAC Res.
Set and Reset Pulse Duration	50 ms minimum
Set Time (typical)	20 ms at nominal coil voltage
Reset Time (typical)	20 ms at nominal coil voltage
Dielectric Strength (at sea level for 1 min.)	4000 Vrms coil to contact 1500 Vrms between open contacts
Insulation Resistance	1000 megohms min. at 20°C, 500 VDC, 50% RH
Creepage Distance	8 mm
Ambient Temperature **Operating** **Storage**	At nominal coil voltage -40°C (-40°F) to 70°C (158°F) -40°C (-40°F) to 105°C (221°F)
Vibration	0.062" DA at 10–55 Hz
Shock **Operating** **Non-Operating**	20 g, 11 ms, 1/2 sine (no false operation) 100 g, 11 ms, 1/2 sine (no damage)
Enclosure	P.B.T. polyester
Terminals	Tinned copper alloy P.C. (coil), heavy tabs (power)
Max. Solder Temp.	270°C (518°F)
Max. Solder Time	5 seconds
Weight	33 grams

AMERICAN ZETTLER, INC. *www.azettler.com*

75 COLUMBIA • ALISO VIEJO, CA 92656 • PHONE: (949) 831-5000 • FAX: (949) 831-8642 • E-MAIL: SALES@AZETTLER.COM

10/26/06W

AZ2500

RELAY ORDERING DATA

COIL SPECIFICATIONS -Standard Single Coil - Termination Style 1				ORDER NUMBER*	
Nominal Coil VDC	Must Operate VDC	Max. Continuous VDC [1]	Coil Resistance ± 10%	Unsealed	Sealed
5	4.0	6.5	24	AZ2500P1–1A–5D	AZ2500P1–-1A–5DE
6	4.8	7.8	35	AZ2500P1–1A–6D	AZ2500P1–-1A–6DE
9	7.2	11.7	80	AZ2500P1–1A–9D	AZ2500P1–-1A–9DE
12	9.6	15.6	145	AZ2500P1–1A–12D	AZ2500P1–-1A–12DE
24	19.2	31.2	575	AZ2500P1–1A–24D	AZ2500P1–-1A–24DE
48	38.4	62.4	2270	AZ2500P1–1A–48D	AZ2500P1–-1A–48DE

* Add suffix “K” for Coil Termination Style 2. For silver tin oxide contacts change “1A” to “1AE.”

COIL SPECIFICATIONS -Standard Dual Coil				ORDER NUMBER*	
Nominal Coil VDC	Must Operate VDC	Max. Continuous VDC [1]	Coil Resistance ± 10%	Unsealed	Sealed
5	4.0	6.5	12	AZ2500P2–1A–5D	AZ2500P2–-1A–5DE
6	4.8	7.8	17.5	AZ2500P2–1A–6D	AZ2500P2–-1A–6DE
9	7.2	11.7	40	AZ2500P2–1A–9D	AZ2500P2–-1A–9DE
12	9.6	15.6	72	AZ2500P2–1A–12D	AZ2500P2–-1A–12DE
24	19.2	31.2	285	AZ2500P2–1A–24D	AZ2500P2–-1A–24DE
48	38.4	62.4	1135	AZ2500P2–1A–48D	AZ2500P2–-1A–48DE

NOTE: Relays may be ordered with twisted copper wire terminations (Styles A-K) as shown below. Contact factory for ordering information.

[1] max. continuous voltage should not be applied for more than 30 seconds.

* For silver tin oxide contacts change “1A” to “1AE.”

MECHANICAL DATA

Outline Dimensions

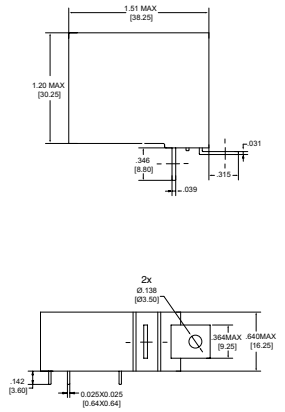

PC Board Layout

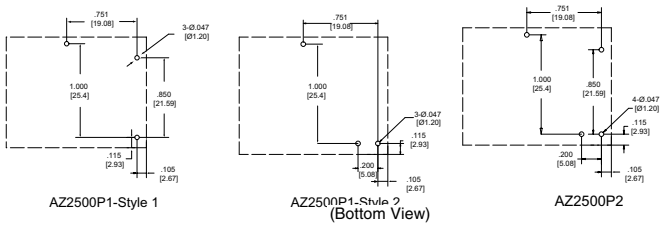

Wiring Diagram

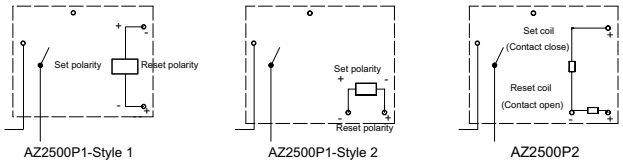

Dimensions in inches with metric equivalents in parentheses. Tolerance: ± .010"

AZ2500

Weld style of twisted copper wire (A to K)

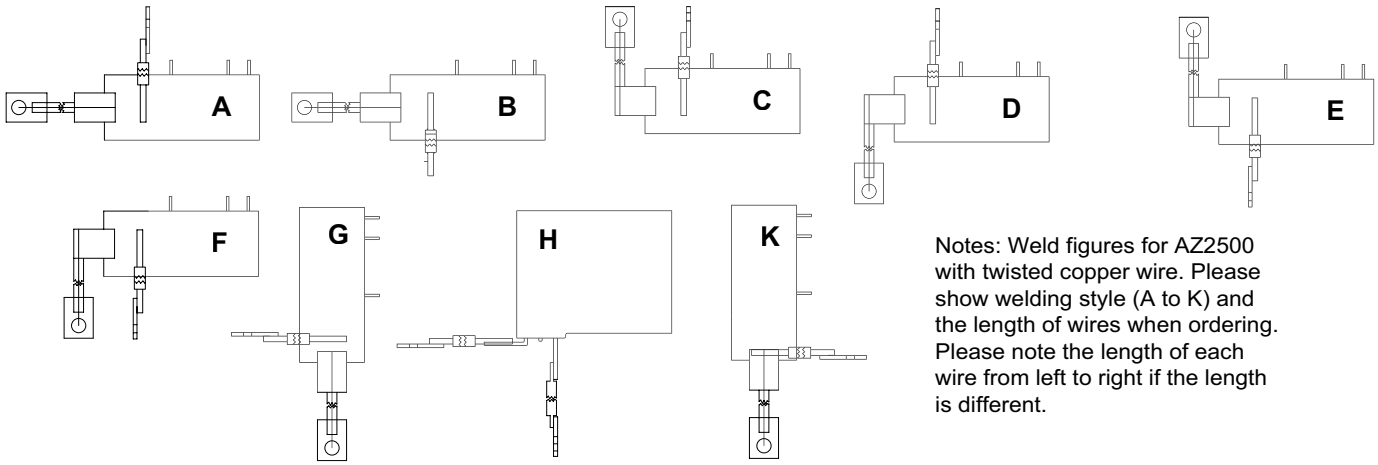

Notes: Weld figures for AZ2500 with twisted copper wire. Please show welding style (A to K) and the length of wires when ordering. Please note the length of each wire from left to right if the length is different.

AMERICAN ZETTLER, INC. *www.azettler.com*

75 COLUMBIA • ALISO VIEJO, CA 92656 • PHONE: (949) 831-5000 • FAX: (949) 831-8642 • E-MAIL: SALES@AZETTLER.COM

10/26/06W