Units:mm

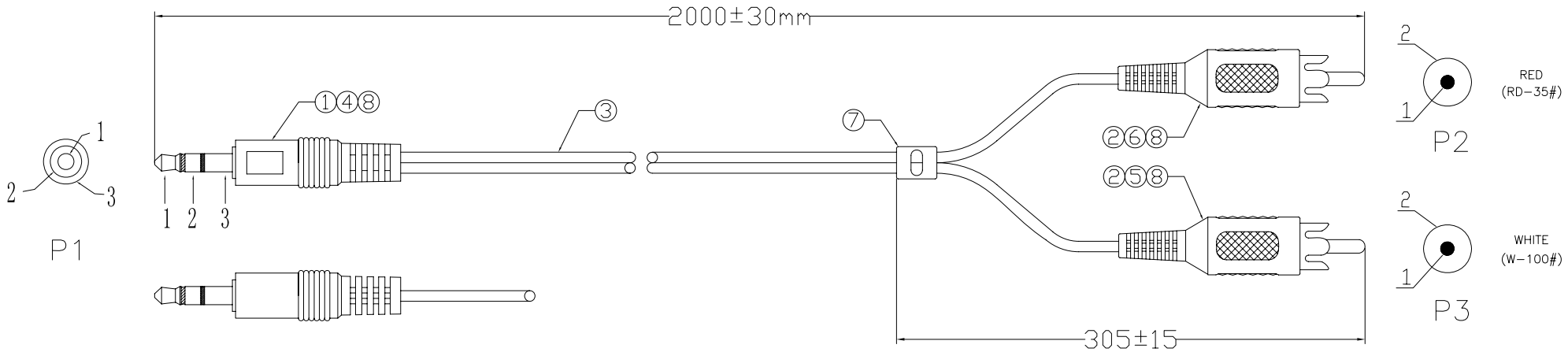

PIN ASSIGNMENT:

P1	P2	P3	COLOR
1	1		RED
2		1	WHITE
3	2		DRAIN(RED)
		2	DRAIN(WHITE)

Electrical test:
1.100% short,open,miswire test
2.Conduct resistance:2 Ohm(max)
3.Insulation resistance:10Mohm(min)
4.dielectric test:DC 300V

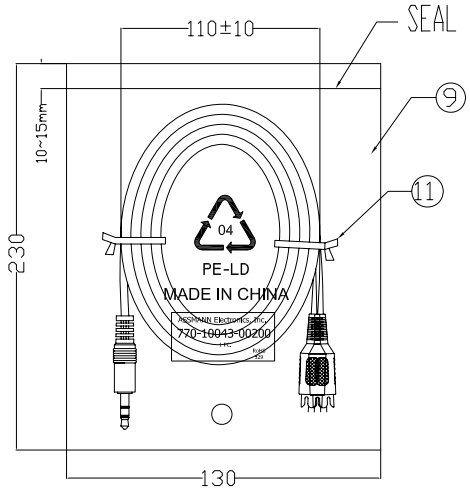

NO.	NAME	Q'TY	SPECIFICATION
⑪	TIE	2	BLACK L=80mm
⑩	PE BAG	1/10	CLEAR SIZE: 280*330*0.05mm PRINT BLACK"MADE IN CHINA"+"10PCS"
⑨	PE BAG	1	CLEAR SIZE: 130*230*0.05mm PRINT BLACK"MADE IN CHINA"+"1PC"
⑧	TUBE	3	HEAT SHRINK TUBE BLACK OD1.5*10mm
⑦	S/R	1.5g	BLACK PVC 40P (Mould NO.:SR-048)
⑥	IN JACKET	0.8g	CLEAR LD-PE (Mould NO.:NM-006)
	OUT JACKET	3.3g	PVC-40P RED(RD-35),(Mould NO.WM-009)
⑤	IN JACKET	0.8g	CLEAR LD-PE (Mould NO.:NM-006)
	OUT JACKET	3.3g	PVC-40P WHITE(W-100)(Mould NO.WM-009)
④	OUT JACKET	3.0g	BLACK PVC-40P (Mould NO.:WM-020)
③	CABLE	1	NOUL [(10/0.10)+S(28/0.10)]*2F JACKET BLACK OD2.8*5.6mm
②	CONN	2	RCA PLUG MALE BLOSSOM TYPE NI-PLATED INSULATOR COLOR:BROWN
①	CONN	1	3.5ST MALE Tray6.0mm L=26mm MOLD TYPE NI-PLATED INSULATOR COLOR:BLACK

CnC Tech, LLC

Industrial Cable and Connector Technology

DRAWED BY	LICHENG	DARWING NO.	
CHECKED BY		CUSTOMER	
APPROVAL BY		ITEM NO.	770-10043-00200
DECIDE BY		DATE	2012-12-17
VERSIONS/EDITEON	A/0	PROJECTION	