DRAWING MADE IN THIRD ANGLE PROJECTION

THIS DRAWING IS UNPUBLISHED. RELEASED FOR PUBLICATION ,19 .

© COPYRIGHT 19 BY AMP INCORPORATED. ALL INTERNATIONAL RIGHTS RESERVED.

MOD	LOC	DIST
8	BD	39

REVISIONS				
ZONE	LTR	DESCRIPTION	DATE	APPD
	A	REDRAWN	6-1-90	–
	B	REV PER ECN BD4493	12/18/90	–

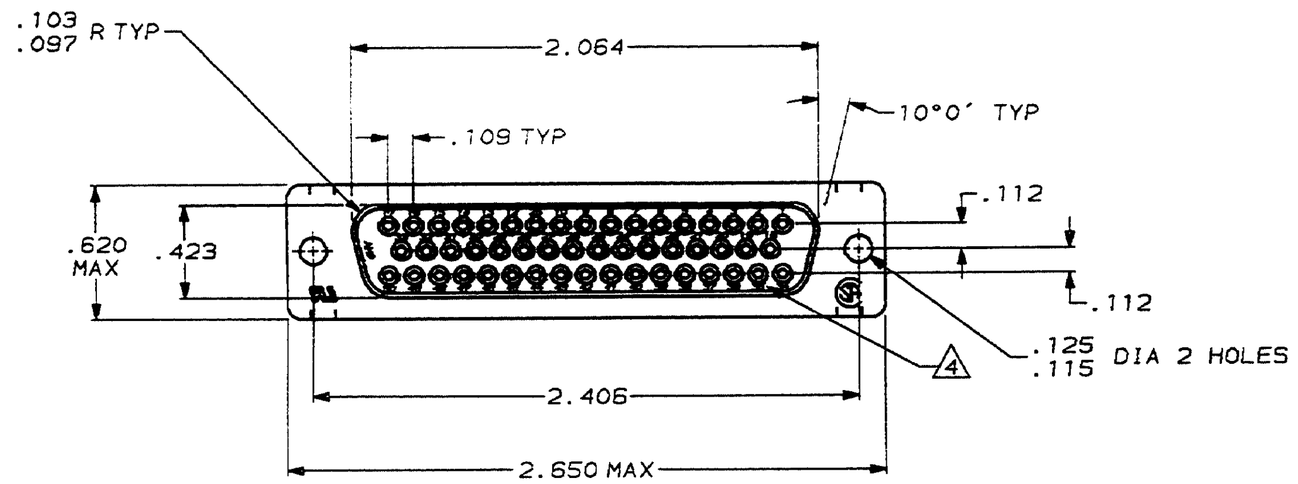

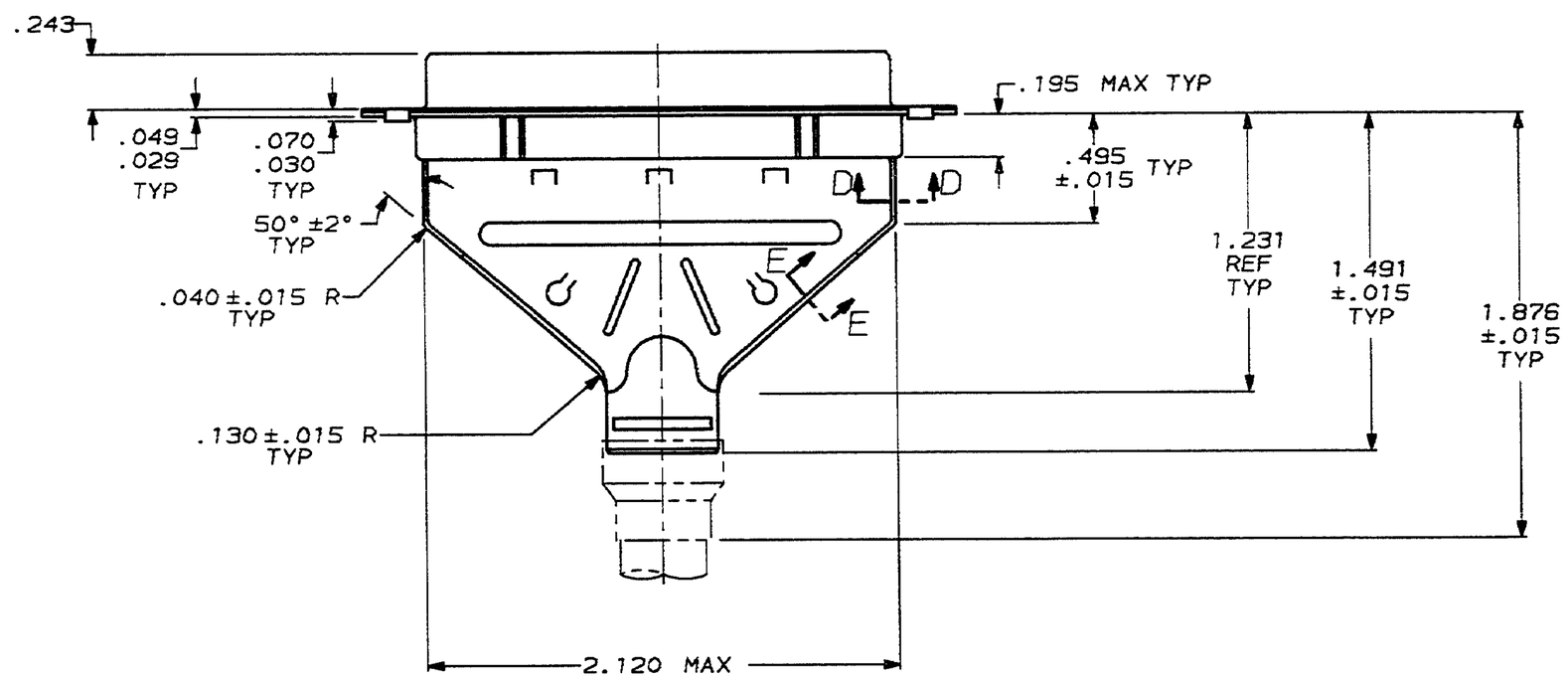

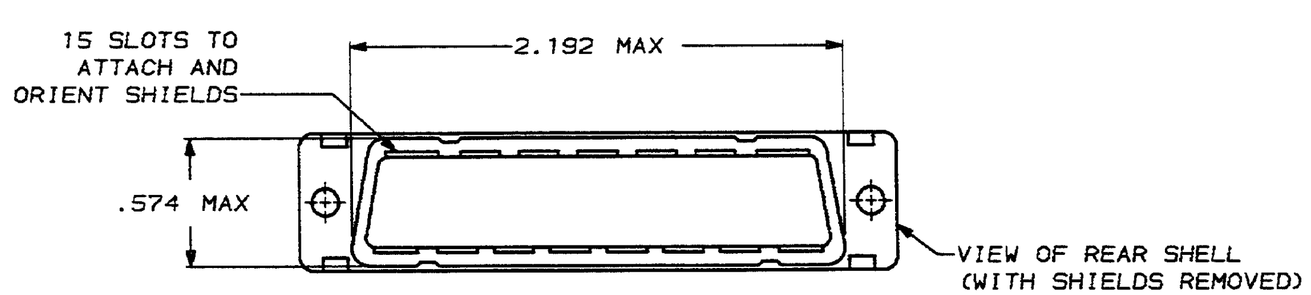

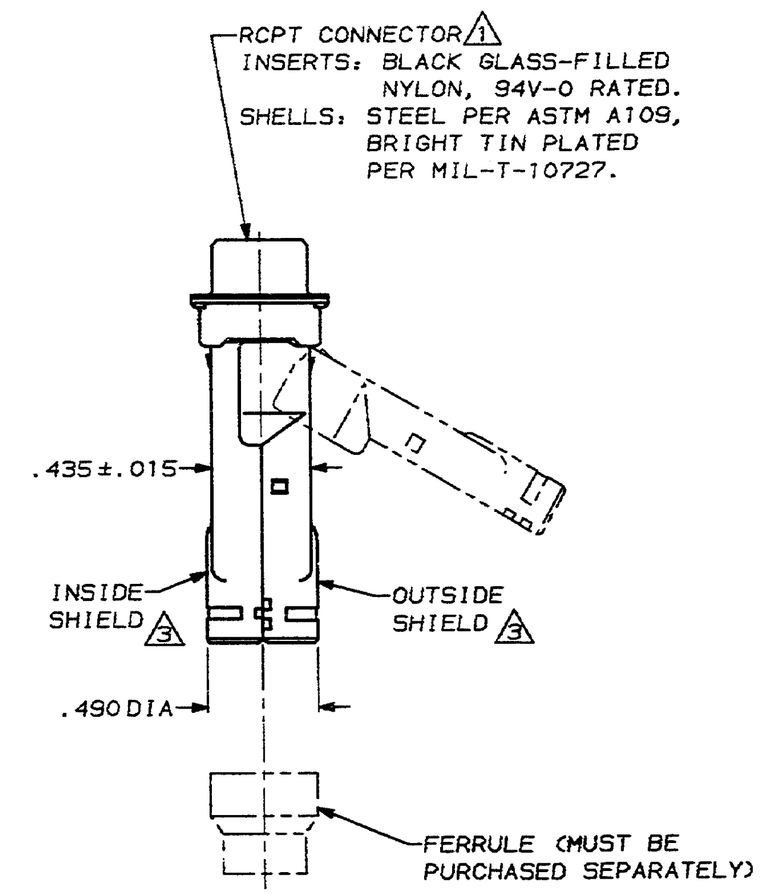

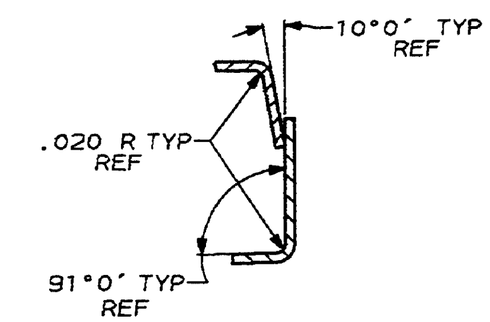

SECTION D-D

SCALE 4:1

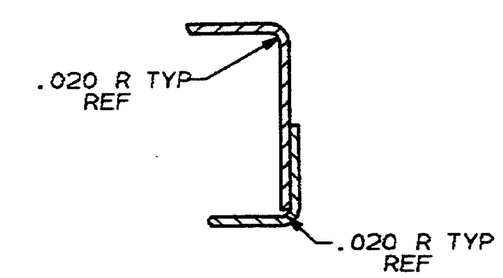

SECTION E-E

SCALE 4:1

1 RCPT ACCEPTS SIZE 20 SOCKET CONTACTS (CONTACTS MUST BE ORDERED SEPARATELY).

2. ALL PARTS SHIPPED UNASSEMBLED, EACH PART INDIVIDUALLY BULK PACKED.

3 SHIELDS: MATERIAL-.020 THICK STEEL, TIN PLATED PER MIL-T-10727.

4 RAISED CAVITY IDENTIFICATION AND AMP TRADEMARK.

747578-1

PART NUMBER

DO NOT SCALE PRINT. UNLESS SPECIFIED DIMENSIONS IN MILLIMETERS TOLERANCES ON : 2 PLC DEC ± – 3 PLC DEC ± .005 ANGLES ± 0°30′	DR 6/1/90 A.STAUB BB	AMP INCORPORATED Harrisburg, Pa. 17105
	CHK 8-31-90 J.McCLINTON	
	APPD 9-4-90 BOB TAYLOR	NAME KIT, RCPT, SHIELDING HARDWARE, SIZE 5, 50 POSN, HDP-20, AMPLIMITE™
MATERIAL SEE CALL OUT 3	APPD 9-4-90 J.ASSINI	
	PRODUCT SPEC –	
FINISH SEE CALL OUT 3	APPLICATION SPEC –	SIZE D · FSCM NO 00779 · DRAWING NO 747578
	WEIGHT –	SCALE 2:1 · SHEET 1 OF 1

CUSTOMER DRAWING

AMP 1750-3 REV 3-88

18 DEC 1990 08:01:56 AMPTOOL