THIS DRAWING IS UNPUBLISHED. RELEASED FOR PUBLICATION 2004
© COPYRIGHT 2004 BY - ALL RIGHTS RESERVED.

REVISIONS					
P	LTR	DESCRIPTION	DATE	DWN	APVD
	C1	REVISION INDEX CORRECTED	30JUL2016	SZN	LSZ
	D	OUT HSG CUTOUT. NEW PN ADDED TO BOM	21SEP2017	SZN	RT
	D1	ADDITIONAL INFO ON WIRE CROSSECT	29AUG2019	SZN	LSZ
	E	SEAL MATERIAL CHANGE	27JUL2022	SZN	LSZ

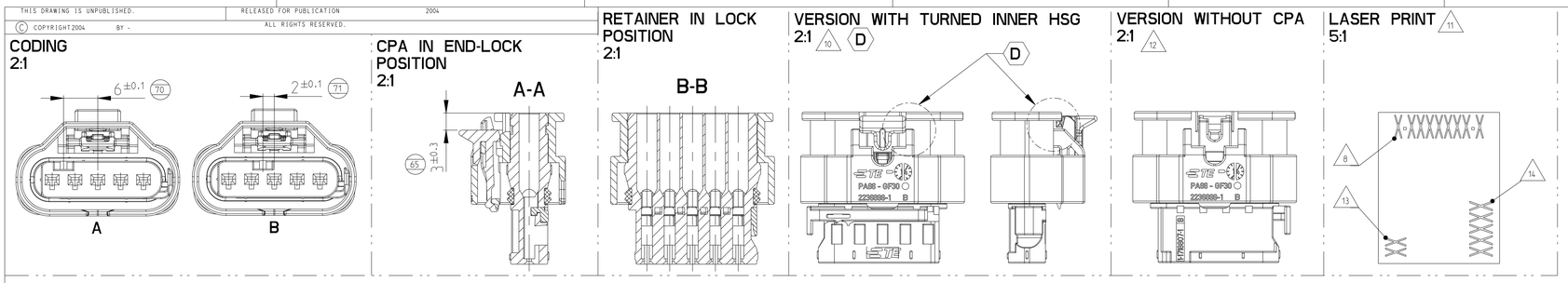

1 USABLE CONTACTS MCON 1.2
SEE TE Connectivity -NO. 1452674. VERSION SINGLE WIRE SEAL

(D1) 2 MAX. WIRE SIZE RANGE 1.5 mm² FLR PERMITTED
FOR CAVITY-Ø 3.55MM
QUANTITY SEE WIRE HARNESS DRAWING
FOR PERMISSIBLE CURRENT CARRYING CAPACITY OF THE SINGLE CONTACT
SEE PRODUCT SPECIFICATION NO.108-18782

(3) SUPPLIER-MARK

(4) SPACE OF ACTIVITY

(5) SUPPLY CONDITION: CPA IN PRELOCKED POSITION

(6) SUPPLY CONDITION: RETAINER IN PRELOCKED POSITION

(7) WARPAGE PERMITTED TO MAX. -0.5mm

(8) TE Connectivity ORDER-NO.

9 ACCORDING TO INTERFACE DRAWING SEE TE-NO. 114-18679-3

(10) VERSION WITH 180° TURNED INNER HSG.

(11) AREA FOR PRINT

(12) VERSION WITHOUT CPA

(13) ASSEMBLY LINE SIGMENT IDENTIFICATION

(14) PRODUCTION DATE CODE (DDDYY)

CODING A AS SHOWN

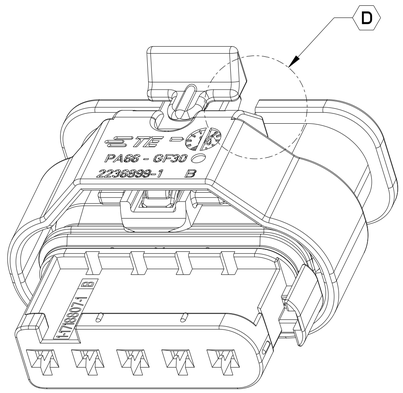

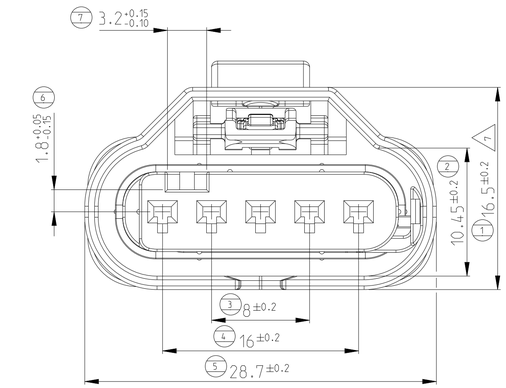

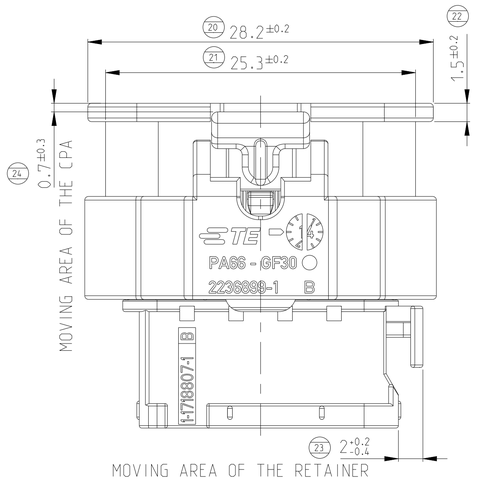

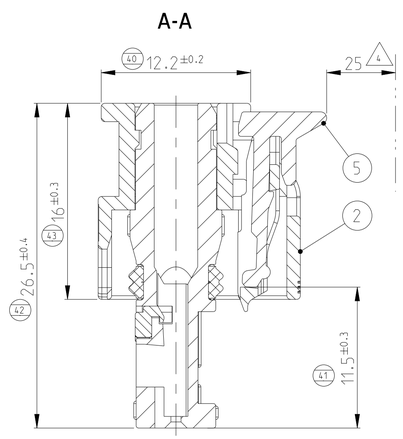

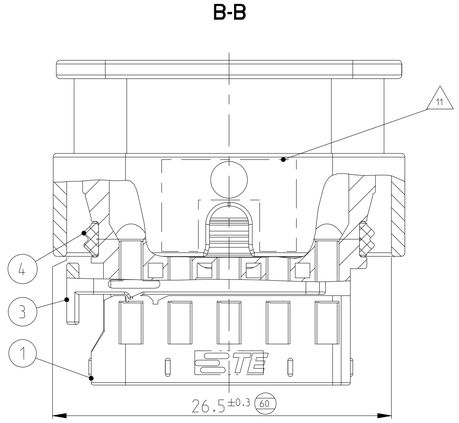

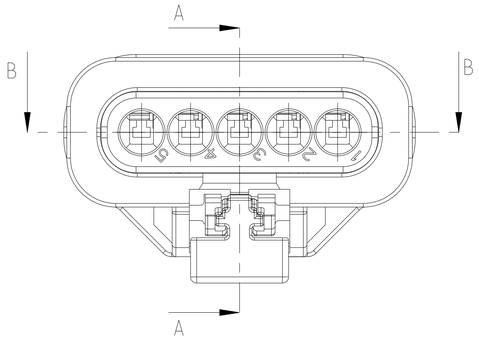

TE-ORDER-NO. (8)	COD	DESCRIPTION	REV	QTY	DESCRIPTION	MATERIAL	SURFACE/COLOR	ITEM
(D1) 1-2236898-2 (10)	A	5pos. MCON 1.2 - LL Connector, Sealed	E	1	5pos. MCON 1.2 - Seal	SILICONE RUBBER	GREEN	4
				1	5pos. MCON 1.2 - Retainer	PA66-GF15	VIOLETT - SIMILAR TO RAL 4006	3
				1	5pos. MCON 1.2 - Protec. Cover	PA66-GF30	BLACK - SIMILAR TO RAL 9011	2
				1	5pos. MCON 1.2 - Rec. Hsg	PA66-GF30	BLACK - SIMILAR TO RAL 9011	1
(D) 1-2236898-3 (10)	A	5pos. MCON 1.2 - LL Connector, Sealed	E	1	MCON 1.2 - CPA	PBT GF33	RED	5
				1	5pos. MCON 1.2 - Seal	SILICONE RUBBER	GREEN	4
				1	5pos. MCON 1.2 - Retainer	PA66-GF15	VIOLETT - SIMILAR TO RAL 4006	3
				1	5pos. MCON 1.2 - Protec. Cover	PA66-GF30	BLACK - SIMILAR TO RAL 9011	2
				1	5pos. MCON 1.2 - Rec. Hsg	PA66-GF30	BLACK - SIMILAR TO RAL 9011	1
2-2236898-5	B	5pos. MCON 1.2 - LL Connector, Sealed	E	1	MCON 1.2 - CPA	PBT GF33	RED	5
				1	5pos. MCON 1.2 - Seal	SILICONE RUBBER	GREEN	4
				1	5pos. MCON 1.2 - Retainer	PA66-GF15	VIOLETT - SIMILAR TO RAL 4006	3
				1	5pos. MCON 1.2 - Protec. Cover	PA66-GF30	BLACK - SIMILAR TO RAL 9011	2
				1	5pos. MCON 1.2 - Rec. Hsg	PA66-GF30	NATURE -	1
1-2236898-5	A	5pos. MCON 1.2 - LL Connector, Sealed	E	1	MCON 1.2 - CPA	PBT GF33	RED	5
				1	5pos. MCON 1.2 - Seal	SILICONE RUBBER	GREEN	4
				1	5pos. MCON 1.2 - Retainer	PA66-GF15	VIOLETT - SIMILAR TO RAL 4006	3
				1	5pos. MCON 1.2 - Protec. Cover	PA66-GF30	BLACK - SIMILAR TO RAL 9011	2
				1	5pos. MCON 1.2 - Rec. Hsg	PA66-GF30	BLACK - SIMILAR TO RAL 9011	1
2-2236898-1 (12)	B	5pos. MCON 1.2 - LL Connector, Sealed	E	1	5pos. MCON 1.2 - Seal	SILICONE RUBBER	GREEN	4
				1	5pos. MCON 1.2 - Retainer	PA66-GF15	VIOLETT - SIMILAR TO RAL 4006	3
				1	5pos. MCON 1.2 - Protec. Cover	PA66-GF30	BLACK - SIMILAR TO RAL 9011	2
				1	5pos. MCON 1.2 - Rec. Hsg	PA66-GF30	NATURE -	1
1-2236898-1 (12)	A	5pos. MCON 1.2 - LL Connector, Sealed	E	1	5pos. MCON 1.2 - Seal	SILICONE RUBBER	GREEN	4
				1	5pos. MCON 1.2 - Retainer	PA66-GF15	VIOLETT - SIMILAR TO RAL 4006	3
				1	5pos. MCON 1.2 - Protec. Cover	PA66-GF30	BLACK - SIMILAR TO RAL 9011	2
				1	5pos. MCON 1.2 - Rec. Hsg	PA66-GF30	BLACK - SIMILAR TO RAL 9011	1

4805 (3/13)

TOLERANCES UNLESS OTHERWISE SPECIFIED ACC. TO DIN 16901-14Q(D)CENTRIC TO NOMINAL DIMENSION. EDITION 1982-11 SHALL APPLY.
Freimasstolerenzen nach DIN 16901-14Q(D). Es gilt die Ausgabe 1982-11.

PRODUCT CHARACTERISTICS ACC. QMP EMEA_12
BESONDERE MERKMALE NACH QMP EMEA_12

THIS DRAWING IS A CONTROLLED DOCUMENT.

DIMENSIONS: mm

TOLERANCES UNLESS OTHERWISE SPECIFIED:
0 PLC ±
1 PLC ±
2 PLC ±
3 PLC ±
4 PLC ±
ANGLES ±2°

MATERIAL -
FINISH -

DWN	Sz.Nemes	30JAN2014
CHK	G.Bencur	30JAN2014
APVD	G.Benczur	30JAN2014
PRODUCT SPEC	108-18969-3	
APPLICATION SPEC	114-18861	
WEIGHT	-	

TE Connectivity

NAME: 5pos. MCON 1.2 - LL Connector, Sealed

SIZE A1 | CAGE CODE 00779 | DRAWING NO C-2236898 | RESTRICTED TO -

CUSTOMER DRAWING | SCALE 11:1 | SHEET 1 OF 1 | REV E