MATERIAL NUMBER	OLD PART NUMBER	FINISHED LENGTH	CABLE JACKET MATERIAL
1201140015	BTY401N-FBE-05	16.40′ +6.50″ -0 [5.0M +165.1 -0]	PVC
1201140016	BTY401N-FBE-10	32.81′ +12.50″ -0 [10.0M +317.5 -0]	PVC
1201140017	BTY401N-FBE-20	65.60′ +12.50″ -0 [20.0M +317.5 -0]	PVC
1201140018	BTY401N-FBP-05	16.40′ +6.50″ -0 [5.0M +165.1 -0]	PUR

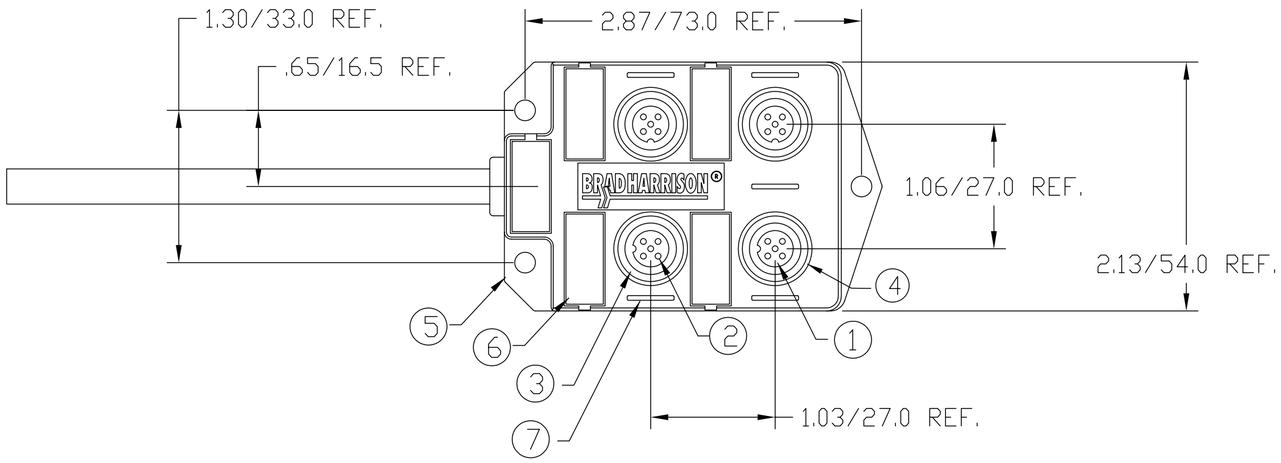

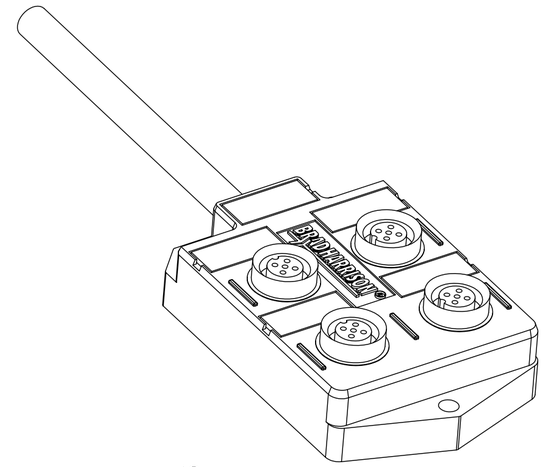

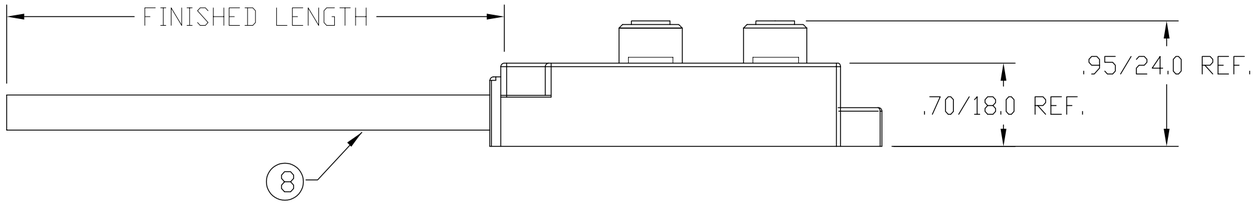

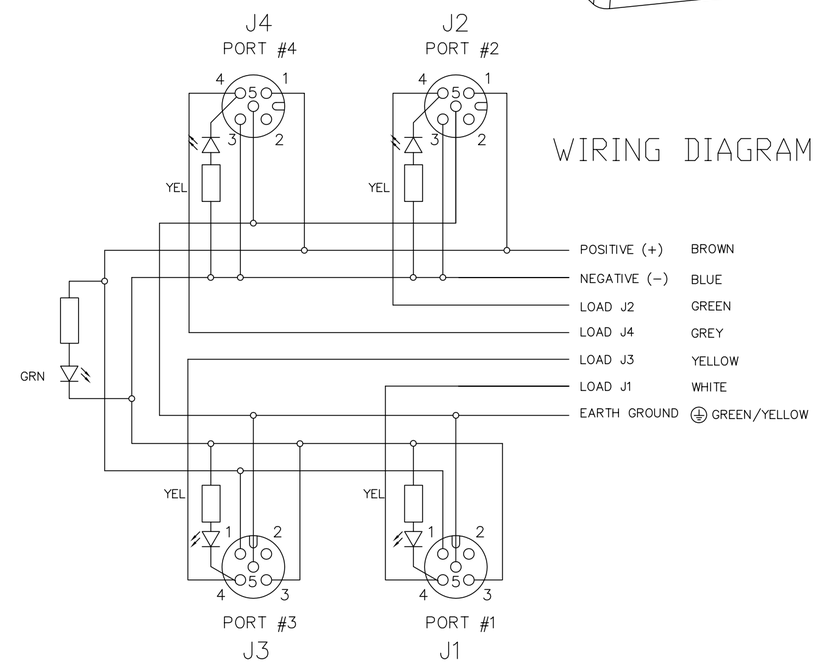

VOLTAGE RATING	10-30 VDC
AMPERAGE RATING PER PORT	4 AMPS
PROTECTION	IP67
OPERATING TEMPERATURE	-20°C TO 90°C
UL CERTIFICATIONS	UL RECOGNIZED, FILE NO. E46237
CSA CERTIFICATIONS	CSA CERTIFIED, FILE NO. LR6837

ITEM	COMPONENT	MATERIAL	FINISH
1	INSERT	NYLON	BLACK
2	CONTACT SOCKET	COPPER ALLOY	GOLD OVER NICKEL
3	O-RING	NITRILE	RED
4	RECEPTACLE SHELL	BRASS	NICKEL PLATED
5	HOUSING	PBT	YELLOW
6	LABEL	ABS	WHITE
7	LENS	NYLON	CLEAR
8	CABLE, 18AWG, 3 CONDUCTOR, 22AWG, 4 CONDUCTOR, 300V	SEE P/N TABLE	YELLOW

REV	DESCRIPTION
A	ADD 2 P/N'S TO TABLE EC NO: WEU2010-0374 DRWN: FPACHER 2010/02/16 CH'KD: NSTAUDIG — APPR: NSTAUDIG 2010/02/18

QUALITY SYMBOL: ▼=0, (C)=0

GENERAL TOLERANCES (UNLESS SPECIFIED)

	mm	INCH
4 PLACES	±-	±-
3 PLACES	±-	±-
2 PLACES	±-	±.01
1 PLACE	±0.3	±-
ANGULAR ±-°		

DRAFT WHERE APPLICABLE MUST REMAIN WITHIN DIMENSIONS

DIMENSION STYLE: IN/MM
SCALE: NTS
DESIGN UNITS: METRIC
THIRD ANGLE PROJECTION

DRAWN BY: FP DATE: 2010/02/15
CHECKED BY: NS DATE: 2010/02/16
APPROVED BY: NSTAUDIG DATE: 2010/02/18

TITLE: MICRO-CHANGE MPIS 4 PORT TOP MOUNT NPN #18/3 + #22/4 CABLE

molex MOLEX INCORPORATED

MATERIAL NO.: SEE CHART
DOCUMENT NO.: SD-120114-011
SHEET NO.: 1 OF 1
SIZE: C

THIS DRAWING CONTAINS INFORMATION THAT IS PROPRIETARY TO MOLEX INCORPORATED AND SHOULD NOT BE USED WITHOUT WRITTEN PERMISSION