Alle Rechte vorbehalten/ *All rights reserved*

Material:

Shielding: Copper alloy with nickel plating
Insert: NY-46, UL-94-V0, black
Contact: -Alloy, C5210, selective gold plating over nickel in contact area
-Tin plating over nickel in solder area

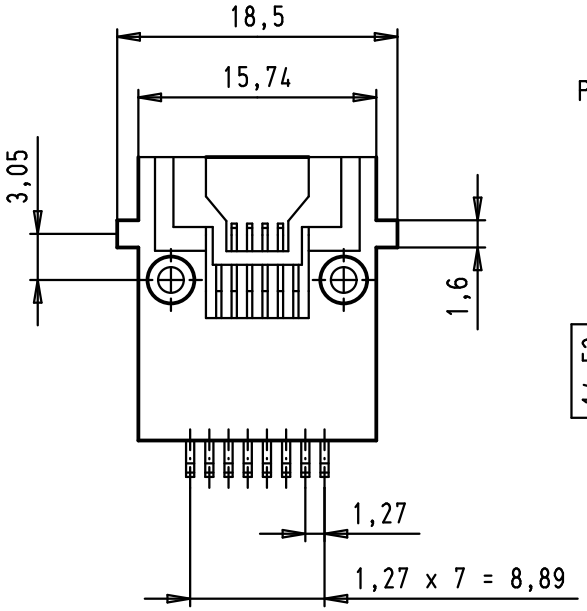

PCB layout, component side

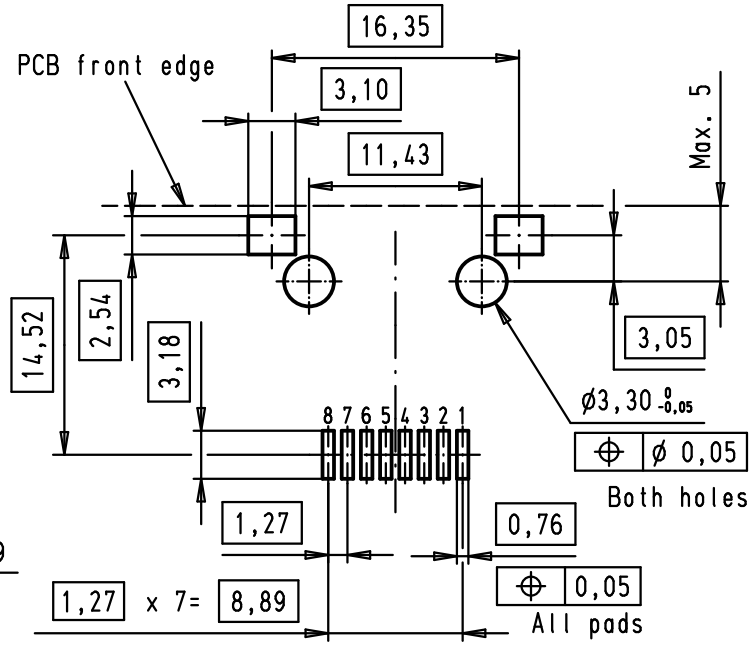

A-A

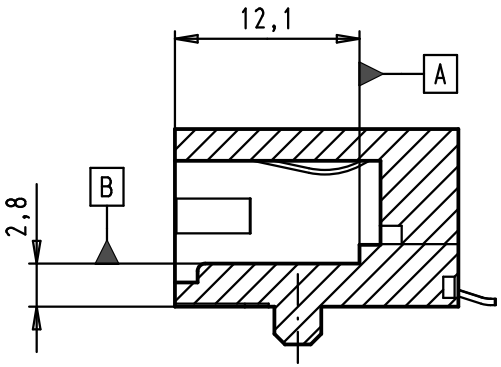

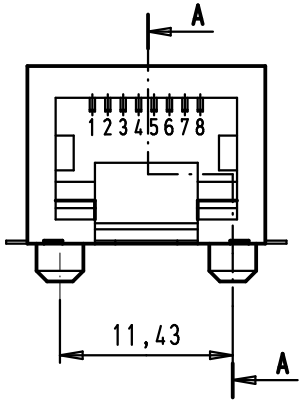

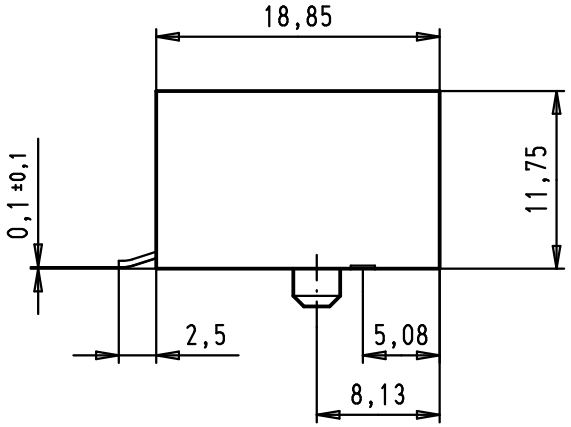

Mod.	Dat.	Name
36299	20/04/12	SD
35070	06/08/08	PK
34885	21/02/08	LP
33468	10/05/06	JFB
32489	15/12/04	JFB
31884	31/03/04	JH

	Dat.	Name
Detail.	31/03/04	JH
Insp.	31/03/04	JMV
Stand.		

All Dim. in mm
Orig. Size DIN A 4

HARTING EURL
F-95972 Paris

HARTING RJ Industrial®
RJ 45 Jack
with 8 SMT signal terminations
and 2 grounding SMT terminations

Maßstab/ *Scale* 2:1

TB 09 45 551 1100

Sub.

Blatt/ *Page* 1/1