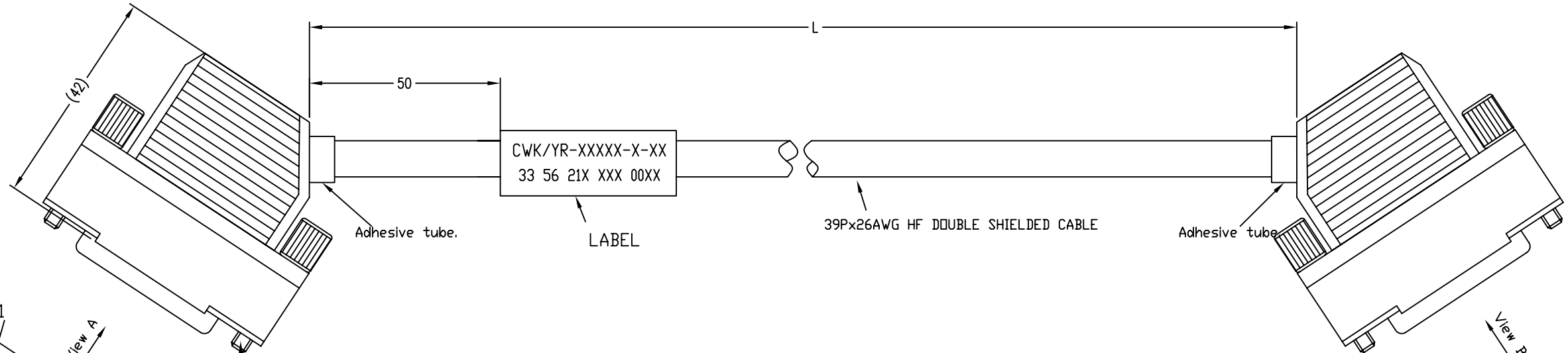

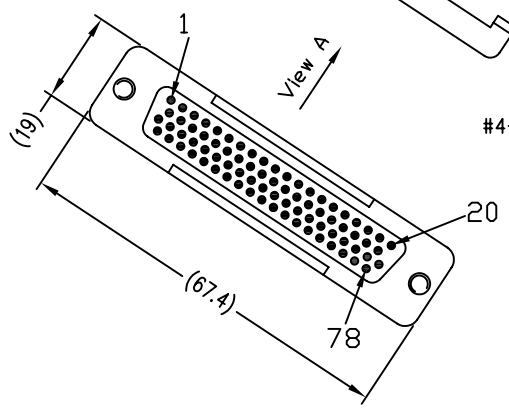

C1

HD D-sub 78P MALE CONNECTOR

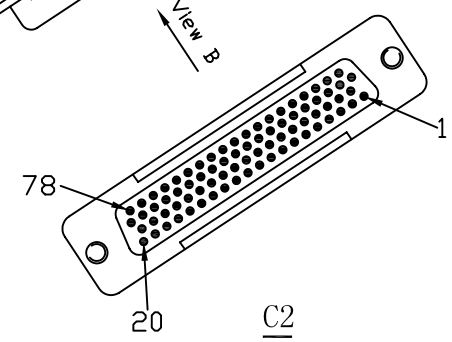

C2

HD D-sub 78P MALE CONNECTOR

WIRING TABLE

PAIR NO	C.1	C.2
1	1	1
	2	2
2	3	3
	4	4
3	5	5
	6	6
4	7	7
	8	8
5	9	9
	10	10
6	11	11
	12	12
7	13	13
	14	14
8	15	15
	16	16
9	17	17
	18	18
10	19	19
	20	20
11	21	21
	22	22
12	23	23
	24	24
13	25	25
	26	26

PAIR NO	C.1	C.2
14	27	27
	28	28
15	29	29
	30	30
16	31	31
	32	32
17	33	33
	34	34
18	35	35
	36	36
19	37	37
	38	38
20	39	39
	40	40
21	41	41
	42	42
22	43	43
	44	44
23	45	45
	46	46
24	47	47
	48	48
25	49	49
	50	50
26	51	51
	52	52

PAIR NO	C.1	C.2
27	53	53
	54	54
28	55	55
	56	56
29	57	57
	58	58
30	59	59
	60	60
31	61	61
	62	62
32	63	63
	64	64
33	65	65
	66	66
34	67	67
	68	68
35	69	69
	70	70
36	71	71
	72	72
37	73	73
	74	74
38	75	75
	76	76
39	77	77
	78	78
	shell	shell

NOTES:

1.) CABLE MUST BE PERFORMED CONTINUITY TEST AND HI-POT TEST.

2.) OPERATING TEMPERATURE = 0°TO +80°C

3.) WHITE LABEL CONTENT:

DATE CODE & LOT INFORMATION
HARTING P/N

4.) THE CABLE SHOULD BE PACKED BY A PLASTIC BAG AND STICK THE LABEL WITH P/N CONTENT ON IT, THEN PUT IT INTO THE CARTON(THE QTY ACCORDING TO ACTUAL CONDITION).

5.) EXPORT CARTON SHOULD BE STICKED THE LABEL WITH P/N AND QTY CONTENT.

Part-No.	Dim.L
33 56 212 200 0031	20 m
33 56 212 100 0030	10 m
33 56 212 050 0029	5 m
33 56 213 200 0016	2 m
33 56 213 100 0002	1 m
33 56 212 005 0028	0.5 m

All Dimensions in mm
Original Size DIN A 3

Techn. Character.

Free size tolerances

	Dat.	Name	Scale
Detail.	08/08/08	Andrew. H	/
Insp.			
Stand.			

HD D-sub 78P MALE DOUBLE END CABLE ASSEMBLY,L=xM

ZHUHAI HARTING LIMITED

TB 33 56 0005.00

Page /

Sub.

Mod.	Dat.	Name