THIS DRAWING IS UNPUBLISHED. RELEASED FOR PUBLICATION -,- .
© COPYRIGHT - By - ALL RIGHTS RESERVED.

LOC	DIST
AJ	16

REVISIONS

P	LTR	DESCRIPTION	DATE	DWN	APVD
	B1	ECR-12-006658	11APR12	RK	MY

1. BERYLLIUM COPPER PER ASTM-B-197.
2. BRASS PER ASTM-B-16.
3. PTFE, PER ASTM-D-1710.
4. GOLD PLATE PER MIL-G-45204.
5. PANEL MOUNTING HOLE = .256±.002 DIA.
6. PANEL THICKNESS = .063±.002

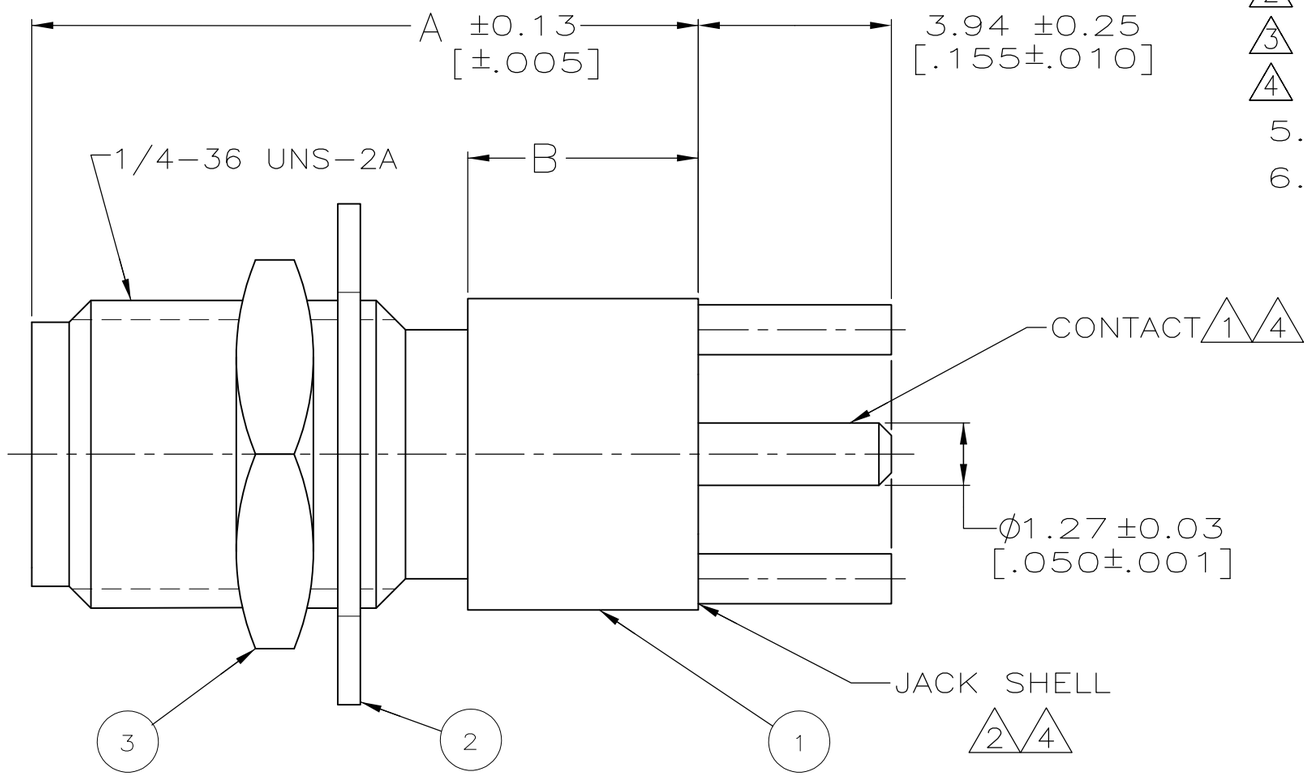

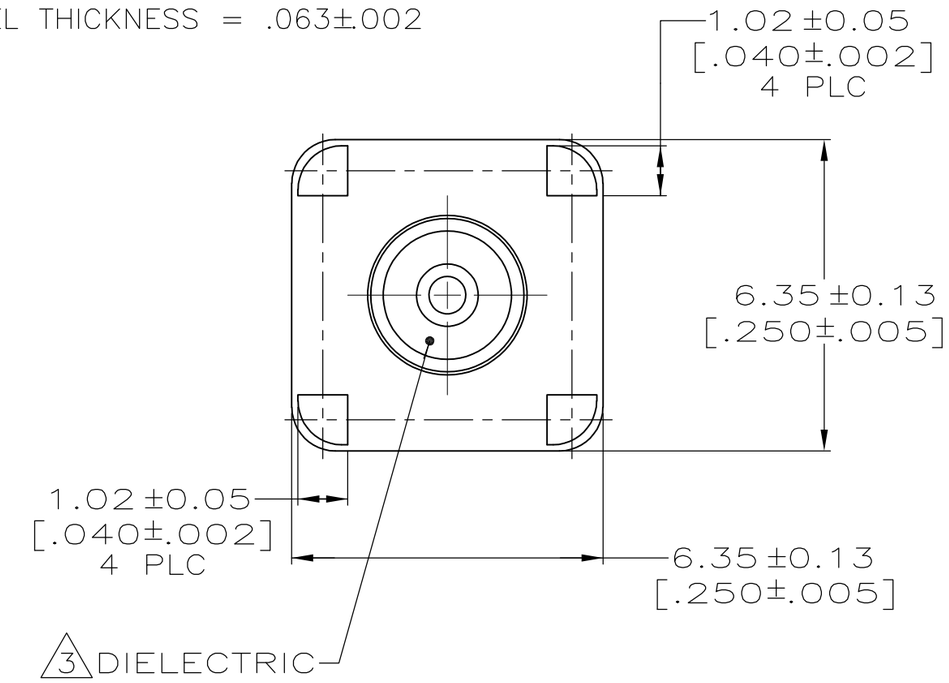

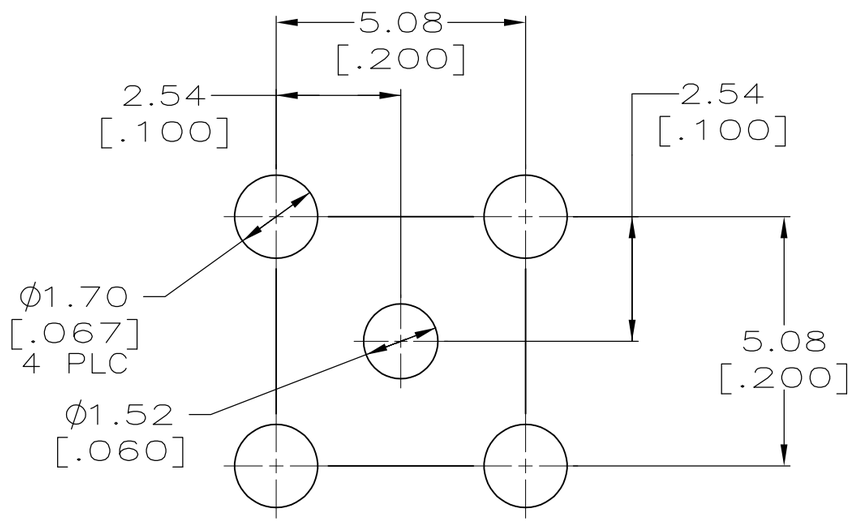

RECOMMENDED PCB CONFIGURATION

5.71 [.225]	15.87 [.625]	2-332004-0	1-22145-3	1274102-2	1274061-2
4.70 [.185]	13.84 [.545]	2-332004-0	1-22145-3	1274102-1	1274061-1
B	A	3 JAMNUT QTY=1	2 LOCKWASHER QTY=1	1 JACK SUB-ASSY QTY=1	PART NUMBER

THIS DRAWING IS A CONTROLLED DOCUMENT.

DIMENSIONS: INCHES

TOLERANCES UNLESS OTHERWISE SPECIFIED:

0 PLC	± -
1 PLC	± -
2 PLC	± 0.08[.003]
3 PLC	± -
4 PLC	± -
ANGLES	± -

MATERIAL -

FINISH -

DWN M. OBRINE 01SEP98
CHK J. CABARLO 01SEP98
APVD J. CABARLO 01SEP98
PRODUCT SPEC —
APPLICATION SPEC —
WEIGHT —

TE Connectivity

NAME JACK, VERTICAL PCB, SMA SERIES

SIZE	CAGE CODE	DRAWING NO	RESTRICTED TO
A3	00779	C-1274061	—

CUSTOMER DRAWING

SCALE	SHEET	REV
8:1	1 OF 1	B1