THIS DRAWING IS UNPUBLISHED. RELEASED FOR PUBLICATION -,- .
© COPYRIGHT - By - ALL RIGHTS RESERVED.

LOC	DIST
AF	50

REVISIONS

P	LTR	DESCRIPTION	DATE	DWN	APVD
	L	REVISED PER ECR-12-013445	18OCT12	KH	PD

1 CONTINUOUS STRIP ON REELS

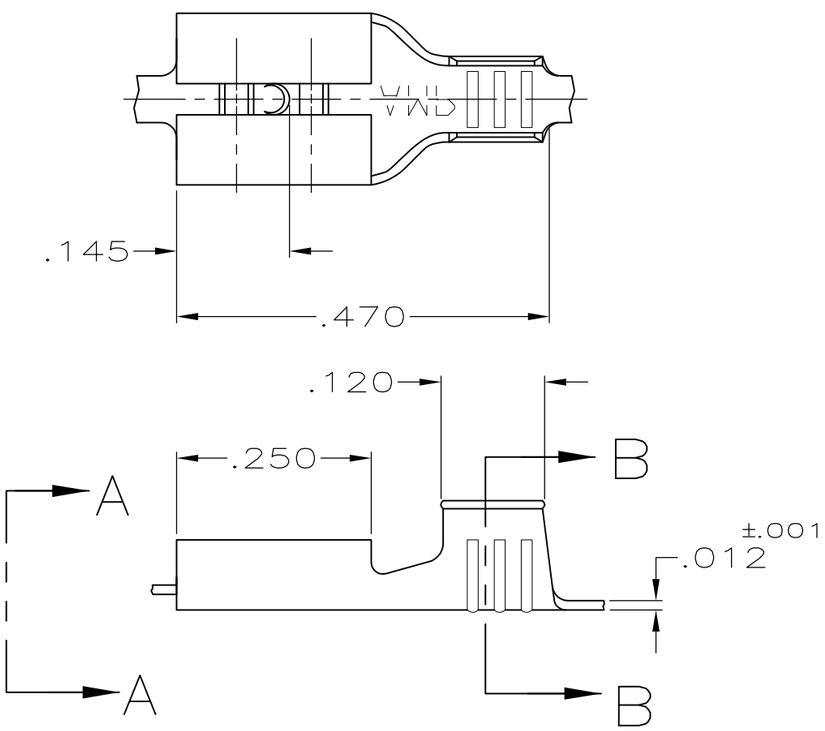

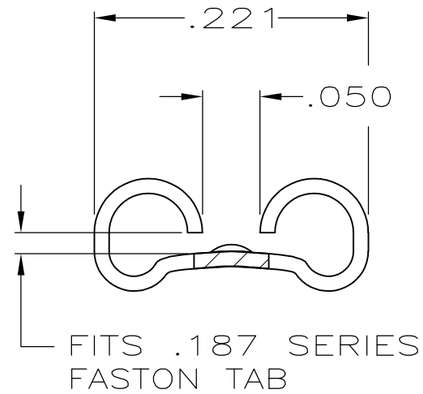

VIEW A-A
SCALE 8:1

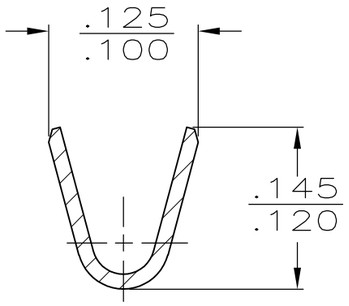

SECTION B-B
SCALE 8:1

	FINISH	MATERIAL	WIRE SIZE	MATING TAB THK ±.001	PART NO
	TIN	BRASS	20-16	.015	42374-2
OBSOLETE	-	#4H BRASS	20-16	.015	~~42374-1~~

STRIP LENGTH ±.015	TYPE	WIDTH	±.002 HEIGHT	WIRE
.188	F	.090	.060	16
			.053	18
			.049	20

WIRE BARREL CRIMP

THIS DRAWING IS A CONTROLLED DOCUMENT.

DIMENSIONS: INCHES

TOLERANCES UNLESS OTHERWISE SPECIFIED:
0 PLC ± -
1 PLC ± -
2 PLC ± -
3 PLC ± .015
4 PLC ± -
ANGLES ± -

MATERIAL: SEE TABLE
FINISH: SEE TABLE

DWN JR RUTH 7/14/89
CHK MS FEHER 7/14/89
APVD C MEYERS 7/14/89
PRODUCT SPEC —
APPLICATION SPEC —
WEIGHT —

TE Connectivity

NAME: RECEPTACLE, FASTON,™ .187 SERIES

SIZE	CAGE CODE	DRAWING NO	RESTRICTED TO
A3	00779	C-42374	—

CUSTOMER DRAWING | SCALE 5:1 | SHEET 1 OF 1 | REV L

1470-19 (3/11)