THIS DRAWING IS UNPUBLISHED. RELEASED FOR PUBLICATION -,- .
© COPYRIGHT - By - ALL RIGHTS RESERVED.

LOC	DIST
G	14

REVISIONS

P	LTR	DESCRIPTION	DATE	DWN	APVD
	F1	REVISED PER ECO-11-004917	11MAR11	RK	HMR

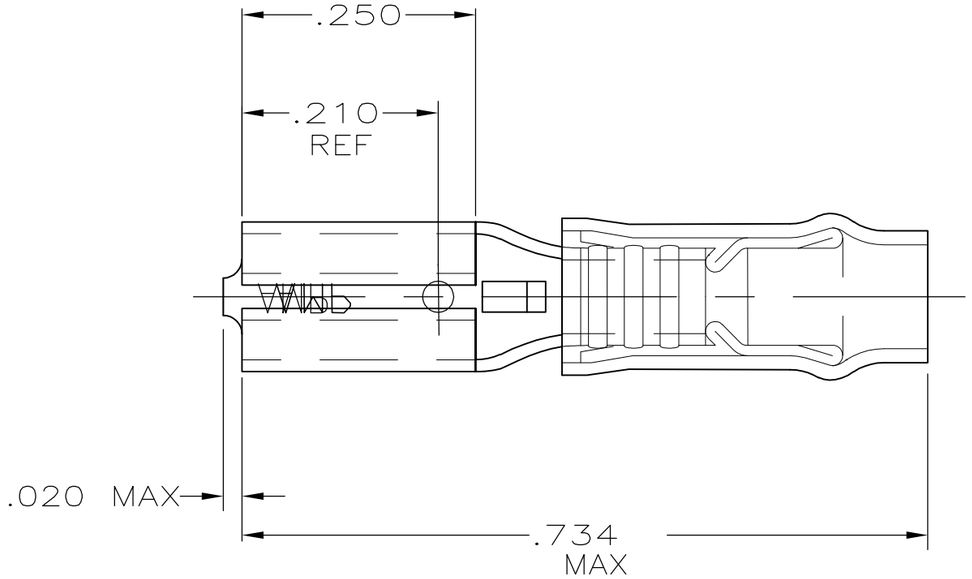

1. INSULATION DIA .100 MAX

2. TAB THK .033 MAX

QTY	PACKAGE TYPE	PART NO
5	LOOSE PC,BLS	8-60894-4
100	LOOSE PC,BOX	8-60894-1
-	TAPE MOUNTED	60894-2
-	LOOSE PIECE	60894-1

AMP INCORPORATED
CUSTOMER SERVICE SYSTEM

FOR ADDITIONAL PRODUCT INFORMATION OR COPIES OF DRAWINGS AND TECHNICAL DOCUMENTS	PRODUCT INFORMATION CENTER 1-800-522-6752
FOR APPLICATION TOOLING INFORMATION	TOOLING ASSISTANCE CENTER 1-800-722-1111
FOR ORDER ENTRY	1-800-526-5142

MAX RECOMMENDED OPERATING TEMPERATURE: -

VOLTAGE RATING: - -

CIRCULAR MIL AREA: - -

THIS DRAWING IS A CONTROLLED DOCUMENT.

DIMENSIONS: INCHES

TOLERANCES UNLESS OTHERWISE SPECIFIED:

0 PLC	± -
1 PLC	± -
2 PLC	± .015
3 PLC	± -
4 PLC	± -
ANGLES	± -

MATERIAL: BODY,BRASS .012 SLV,NYLON,COLOR,CLEAR

FINISH: BODY,PRE-TIN

DWN	L OLMEDA	13NOV95
CHK	M ELLIS	13NOV95
APVD	B BARE	13NOV95
PRODUCT SPEC	—	
APPLICATION SPEC	—	
WEIGHT	—	

TE Connectivity

NAME: RECEPTACLE, 110 SERIES, FASTON™, PIDG™, WIRE SIZE, 22-18 AWG

SIZE	CAGE CODE	DRAWING NO	RESTRICTED TO
A3	00779	C-60894	—

CUSTOMER DRAWING | SCALE NTS | SHEET 1 OF 1 | REV F1

1470-19 (3/11)