MATERIAL NUMBER	ENGINEERING NUMBER	FITS MALE TAB SIZE	"A" MAX.	"C" MAX.	"E" MAX.	CARRIER CONFIGURATION
190030132	BB-2207V	.187X.020	.78/19.8	.316/8.03	.170/4.32	LOOSE PIECE
190030133	BB-2207VT	.187X.020	.78/19.8	.316/8.03	.170/4.32	TAPE MOUNT
190030134	BB-2207VC	.187X.020	.78/19.8	.316/8.03	.170/4.32	PLASTIC STRIP
190030135	BB-2208V	.187X.032	.78/19.8	.316/8.03	.170/4.32	LOOSE PIECE
190030136	BB-2208VT	.187X.032	.78/19.8	.316/8.03	.170/4.32	TAPE MOUNT
190030137	BB-2208VC	.187X.032	.78/19.8	.316/8.03	.170/4.32	PLASTIC STRIP
190030044	BB-2206VB	.250X.032	.86/21.8	.380/9.65	.180/4.57	LOOSE PIECE
190030080	BB-2206VBT	.250X.032	.86/21.8	.380/9.65	.180/4.57	TAPE MOUNT
190030045	BB-2206VBC	.250X.032	.86/21.8	.380/9.65	.180/4.57	PLASTIC STRIP

(B)

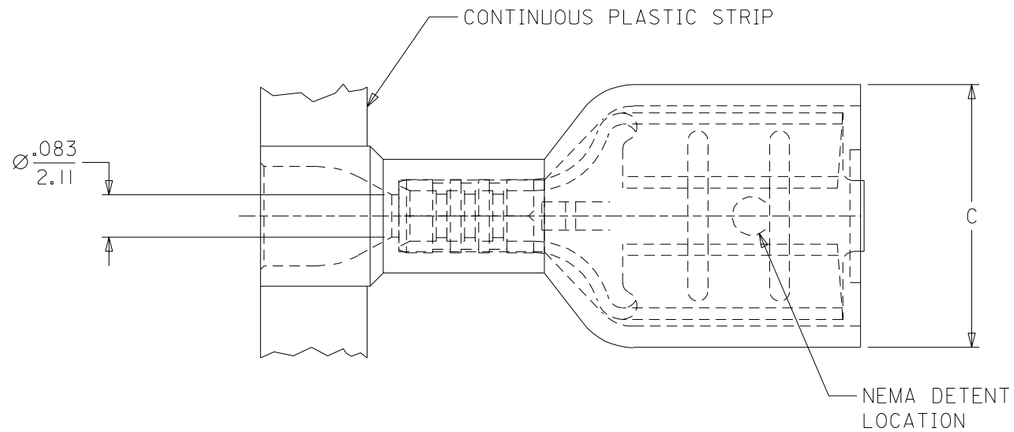

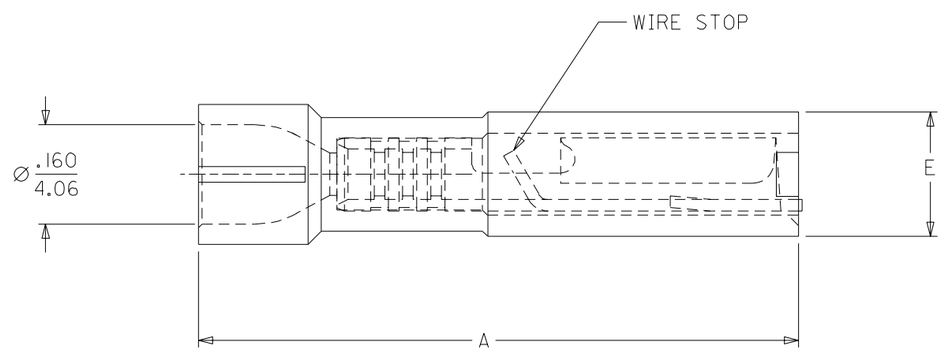

SALES DRAWING

NOTES:

(B) 1. MATERIAL: TERMINAL: BRASS .016/0.41
PLATING: ELECTRO-TIN
INSULATION: NYLON 6/6 94V-0 RATING
COLOR: BLUE.

2. MWID = MAXIMUM WIRE INSULATION DIAMETER

3. ALL DIMENSIONS = INCHES/MM

REV	DESCRIPTION
B	REV'D NYLON COLOR EC NO. ETC2004-0101 DRWN: BRE 03/11/21 CH'K: HEB 03/11/21 APPR: RWD 03/11/21

QUALITY SYMBOLS
MAJOR =0
CRITICAL (C) =0

GENERAL TOLERANCES: (UNLESS SPECIFIED)

	mm	INCH
4 PLACES	±0.---	±.---
3 PLACES	±0.---	±.005
2 PLACES	±0.13	±.01
1 PLACE	±0.25	±.---
ANGULAR: ±1/2°		

DRAFT WHERE APPLICABLE MUST REMAIN WITHIN DIMENSIONS

SCALE NO:NE
DESIGN UNITS ☐ mm ☒ INCH
THIRD ANGLE PROJECTION
DIMENSIONS: ☐ mm/INCH ☒ INCH/mm ☐ mm ONLY
SHT REV
REVISE ON CAD ONLY

DRAWN BY & DATE HEB 01/06/07
CHECKED BY & DATE RWD 01/06/07
APPROVED BY & DATE RWD 01/06/07

TITLE: FIQD FEMALE, INSULKRIMP
94V-0 MATERIAL
16-14 AWG

molex MOLEX INCORPORATED

CAD FILENAME S19003002.DGN
MATERIAL NO. SEE TABLE
DRAWING NO. SD-19003-002
SHEET NO. 1 OF 1
SIZE B

THIS DRAWING CONTAINS INFORMATION THAT IS PROPRIETARY TO MOLEX INCORPORATED AND SHOULD NOT BE USED WITHOUT WRITTEN PERMISSION.