THIS DRAWING IS UNPUBLISHED. RELEASED FOR PUBLICATION - , - .
© COPYRIGHT - By - ALL RIGHTS RESERVED.

LOC	DIST
AA	00

REVISIONS

P	LTR	DESCRIPTION	DATE	DWN	APVD
	B1	REVISED PER ECO-11-005140	28MAR11	RK	HMR

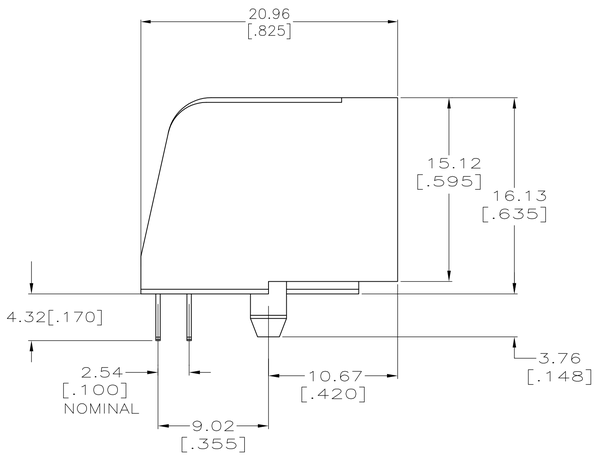

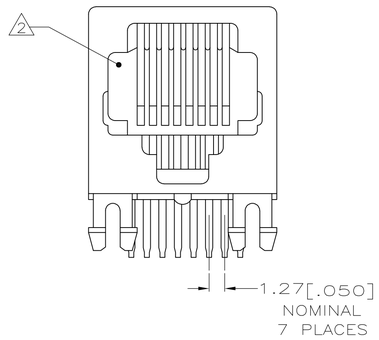

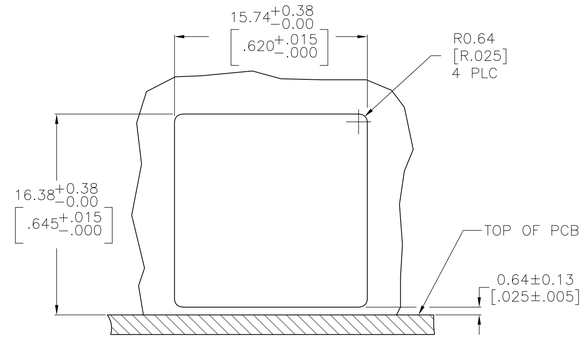

1. MATERIAL: HOUSING PBT POLYESTER, COLOR: BLACK. TERMINAL–0.36 [.014] THICK PHOS–BRONZE PLATED WITH 1.27um [.000050] MINIMUM THICK HARD GOLD IN LOCALIZED GOLD PLATE AREA AND 3.81um [.000150] MINIMUM THICK MATTE TIN IN SOLDER AREA OVER 1.27um [.000050] MINIMUM THICK NICKEL UNDERPLATE.

2. CAVITY CONFORMS TO FCC RULES AND REGULATIONS PART 68 AND REA BULLETIN 345–81, PE–76 SPECIFICATION FOR MODULAR TELEPHONE HARDWARE.

3. ALL DIMENSIONS SHOWN ARE MAXIMUM UNLESS OTHERWISE SPECIFIED.

4. BULK PACKAGED IN TRAY

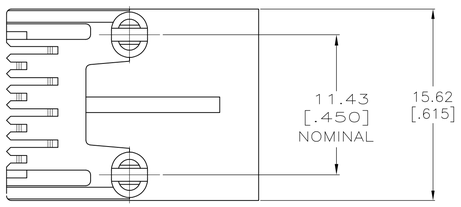

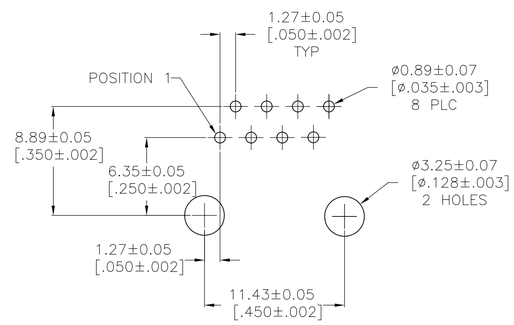

RECOMMENDED PRINTED CIRCUIT BOARD
LAYOUT
COMPONENT SIDE SHOWN

4	8	5520426–4
PACKAGED	CONTACTS	PART NUMBER

THIS DRAWING IS A CONTROLLED DOCUMENT.

DIMENSIONS: mm [INCHES]

TOLERANCES UNLESS OTHERWISE SPECIFIED:
0 PLC ± –
1 PLC ± –
2 PLC ± 0.13[.005]
3 PLC ± –
4 PLC ± –
ANGLES ± –

MATERIAL: SEE NOTE 1
FINISH: SEE NOTE 1

DWN 06JUN2005 G. ATTADIA – DOCKS
CHK 06JUN2005 J. WESTMAN
APVD 06JUN2005 S. FLICKINGER
PRODUCT SPEC 108–1163
APPLICATION SPEC 114–2048
WEIGHT –

TE Connectivity

NAME: MODULAR JACK ASSEMBLY, SIDE ENTRY, 8 POSITION, FLANGELESS, WITHOUT PANEL STOPS

SIZE	CAGE CODE	DRAWING NO	RESTRICTED TO
A1	00779	C-5520426	–

CUSTOMER DRAWING | SCALE 4:1 | SHEET 1 OF 1 | REV B1