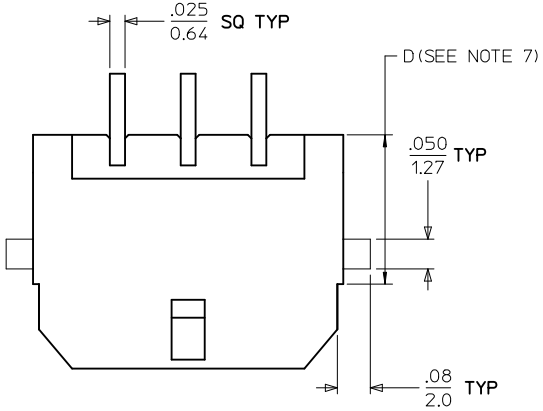

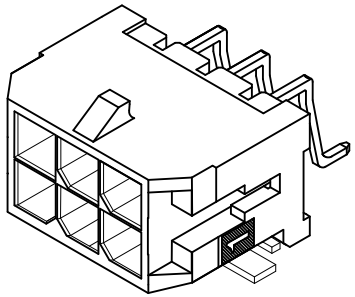

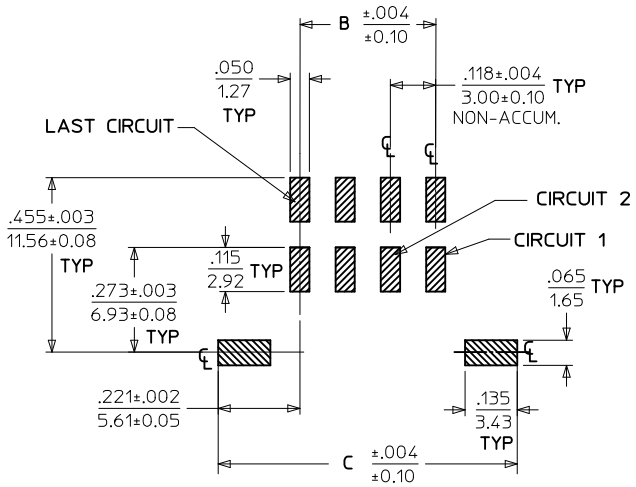

PCB LAYOUT: COMPONENT SIDE

CKTS	A	B	C
02	.262 6.65	NA	.441 11.20
04	.380 9.65	.118 3.00	.559 14.20
06	.498 12.65	.236 6.00	.677 17.20
08	.616 15.65	.354 9.00	.795 20.20
10	.734 18.65	.472 12.00	.913 23.20
12	.852 21.65	.591 15.00	1.031 26.20
14	.970 24.65	.709 18.00	1.150 29.20
16	1.088 27.65	.827 21.00	1.268 32.20
18	1.206 30.65	.945 24.00	1.386 35.20
20	1.325 33.65	1.063 27.00	1.504 38.20
22	1.443 36.65	1.181 30.00	1.622 41.20
24	1.561 39.65	1.299 33.00	1.740 44.20

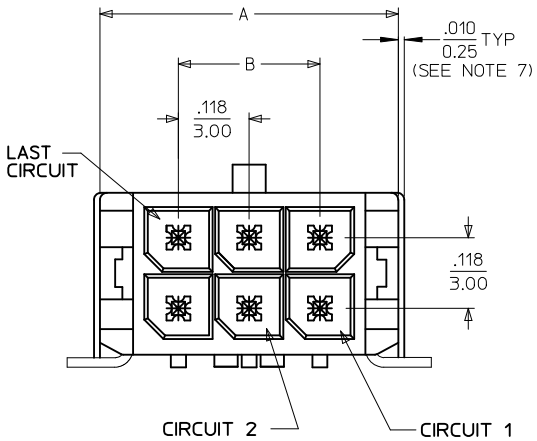

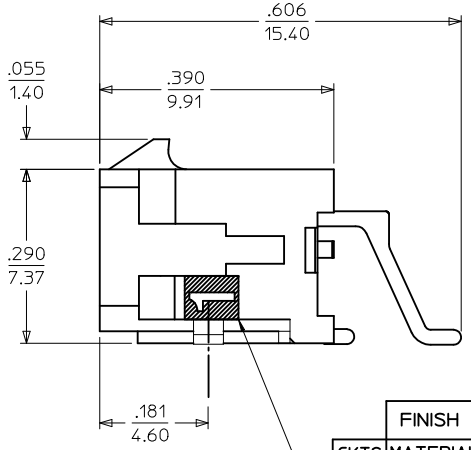

CIRCUIT "1" IDENTIFIED ON THIS SURFACE (APPROX. LOCATION SHOWN FOR REF.)

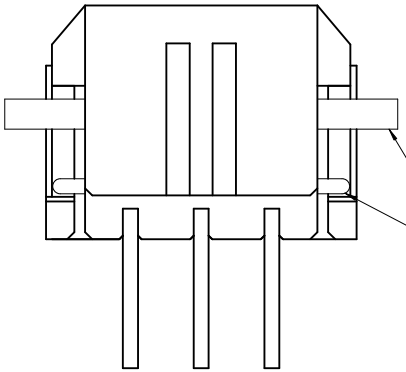

	FINISH A	FINISH B	FINISH C
CKTS	MATERIAL NO:	MATERIAL NO:	MATERIAL NO:
02	43045-0209	43045-0210	43045-0211
04	43045-0409	43045-0410	43045-0411
06	43045-0609	43045-0610	43045-0611
08	43045-0809	43045-0810	43045-0811
10	43045-1009	43045-1010	43045-1011
12	43045-1209	43045-1210	43045-1211
14	43045-1409	43045-1410	43045-1411
16	43045-1609	43045-1610	43045-1611
18	43045-1809	43045-1810	43045-1811
20	43045-2009	43045-2010	43045-2011
22	43045-2209	43045-2210	43045-2211
24	43045-2409	43045-2410	43045-2411

NOTES:

1. HOUSING MATERIAL: GLASS FILLED LIQUID CRYSTAL POLYMER UL94V-0, COLOR: BLACK
   TERMINAL MATERIAL: BRASS ALLOY
2. FINISH:
   A = .000100/(0.00254) MIN. TIN OVER .000050/(0.00127) MIN. NICKEL PLATE.
   B = .000015/(0.00038) MIN. GOLD IN SELECTIVE AREA, .000100/(0.00254) MIN. MATTE TIN ON SOLDER TAILS, BOTH OVER .000050/(0.00127) MIN. NICKLE PLATE.
   C = .000030/(0.00076) MIN. GOLD IN SELECTIVE AREA, .000100/(0.00254) MIN. MATTE TIN ON SOLDER TAILS, BOTH OVER .000050/(0.00127) MIN. NICKLE PLATE.
3. PRODUCT SPECIFICATION: PS-43045
4. TAPE AND REEL PACK: SEE MOLEX DRAWING PK-70873-05**
5. MATES WITH MOLEX RECEPTACLE SERIES 43025
6. THE COPLANARITY DIMENSION IS ESTABLISHED BY PLACING THE ASSEMBLY ON A FLAT SURFACE. THE DISTANCE FROM THAT SURFACE TO THE BOTTOM OF ANY TERMINAL OR NAIL MUST NOT EXCEED .006/0.15.
7. CIRCUIT SIZES 2-6: "D" IS 0.265/6.74 FOR .010/0.25 STEP. CIRCUIT SIZES 8-24: "D" IS .063/1.60 FOR .010/0.25 STEP.
8. TO AVOID INTERFERENCE BETWEEN RECEPTACLE AND PCB, HEADER MUST BE PLACED WITHIN .400/(10.16) MAX. FROM EDGE OF PCB, AS SHOWN IN LOCATION DETAIL.
9. THIS PART CONFORMS TO CLASS B REQUIREMENTS OF COSMETIC SPECIFICATION PS-45499-002.

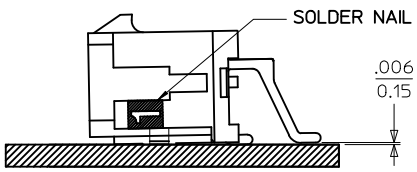

COPLANARITY DETAIL
(SEE NOTE #6)

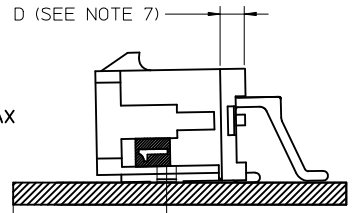

LOCATION DETAIL
(SEE NOTE #8)

FIX 0.63 TO .063
EC NO: UCP2012-0953 2011/09/22
DRWN:MMSTROH 2011/09/28
CHKD:SSOUSEK 2011/09/27
APPR:FSMITH 2011/09/27
DESCRIPTION
G2
REV

QUALITY SYMBOLS
=0
=0
=0

GENERAL TOLERANCES (UNLESS SPECIFIED)

	mm	INCH
4 PLACES	± ---	± ---
3 PLACES	± ---	± .010
2 PLACES	± 0.25	± .014
1 PLACE	± 0.36	± ---
ANGULAR ±1/2°		

DRAFT WHERE APPLICABLE MUST REMAIN WITHIN DIMENSIONS

DIMENSION STYLE: IN/MM
SCALE: ---
DESIGN UNITS: METRIC
THIRD ANGLE PROJECTION

DRAWN BY: SAMIEC	DATE: 2000/03/15	
CHECKED BY: MUELLER	DATE: 2000/03/15	
APPROVED BY: EDGLEY	DATE: 2000/03/15	
MATERIAL NO.: SEE CHART	DOCUMENT NO.: SD-43045-004	SHEET NO.: 1 OF 1

TITLE: MICRO FIT (3.0) DUAL ROW RIGHT ANGLE SMT HEADER W/NAILS ASS'Y

molex MOLEX INCORPORATED

SIZE: C

THIS DRAWING CONTAINS INFORMATION THAT IS PROPRIETARY TO MOLEX INCORPORATED AND SHOULD NOT BE USED WITHOUT WRITTEN PERMISSION