THIS DRAWING IS UNPUBLISHED. RELEASED FOR PUBLICATION -
© COPYRIGHT 20 BY - ALL RIGHTS RESERVED.

REVISIONS					
P	LTR	DESCRIPTION	DATE	DWN	APVD
	F1	REVISED PER ECR-16-011494	27JUN2017	NK	CX

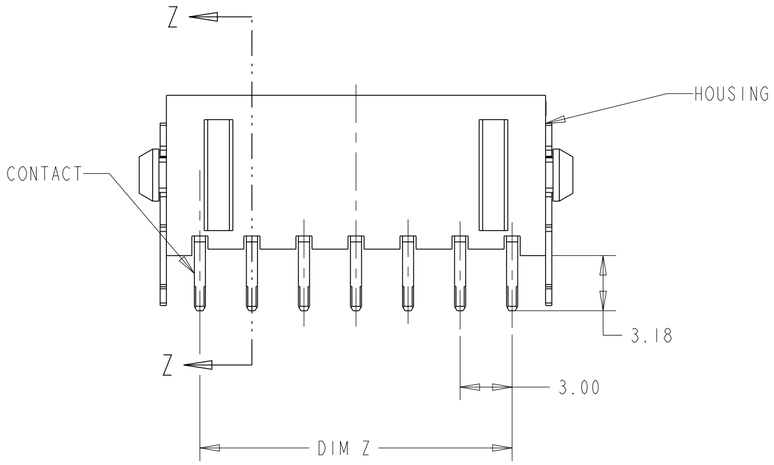

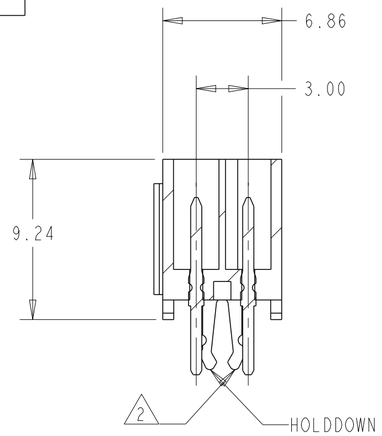

SECTION Z-Z

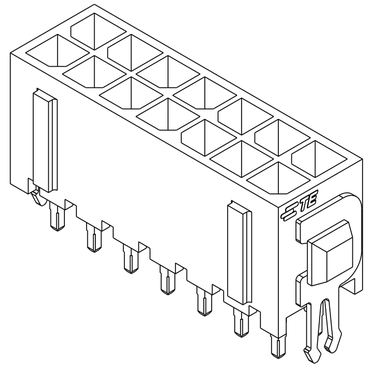

3 DIMENSIONAL MODEL

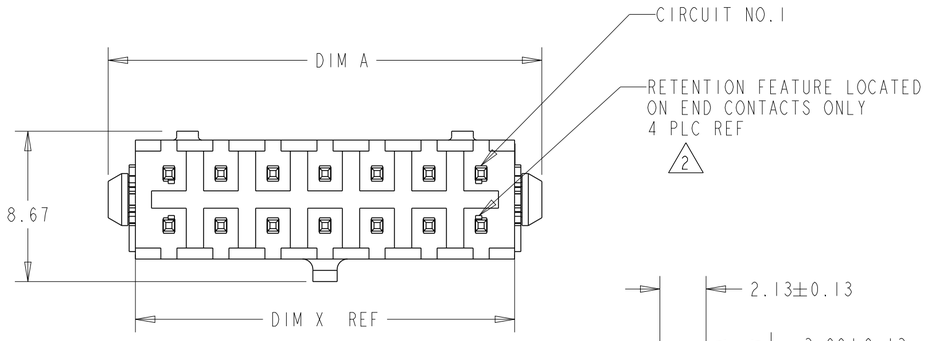

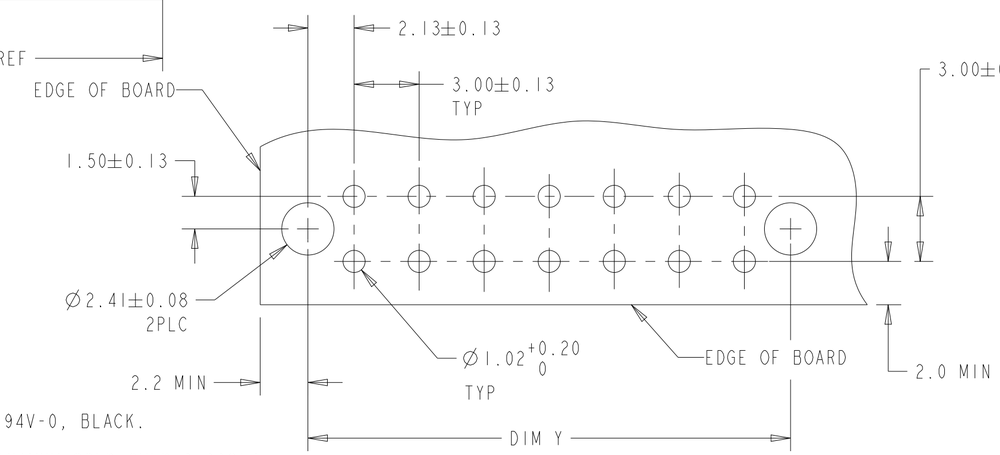

RECOMMENDED MOUNTING HOLE PATTERN 3
SCALE 5:1

	FINISH	DIM A	DIM Z	DIM Y	DIM X	NO. OF POSN.	PART NUMBER
	4	40.00	33.00	37.30	36.86	24	5-794681-4
	4	37.00	30.00	34.30	33.86	22	5-794681-2
	4	34.00	27.00	31.30	30.86	20	5-794681-0
	4	31.00	24.00	28.30	27.86	18	4-794681-8
	4	28.00	21.00	25.30	24.86	16	4-794681-6
	4	25.00	18.00	22.30	21.86	14	4-794681-4
	4	22.00	15.00	19.30	18.86	12	4-794681-2
	4	19.00	12.00	16.30	15.86	10	4-794681-0
	4	16.00	9.00	13.30	12.86	8	3-794681-8
	4	13.00	6.00	10.30	9.86	6	3-794681-6
	4	10.00	3.00	7.30	6.86	4	3-794681-4
	4	7.00	-	4.30	3.86	2	3-794681-2
SUPERSEDED BY 5-794681-4	1	40.00	33.00	37.30	36.86	24	~~2-794681-4~~
SUPERSEDED BY 5-794681-2	1	37.00	30.00	34.30	33.86	22	~~2-794681-2~~
SUPERSEDED BY 5-794681-0	1	34.00	27.00	31.30	30.86	20	~~2-794681-0~~
SUPERSEDED BY 4-794681-8	1	31.00	24.00	28.30	27.86	18	~~1-794681-8~~
SUPERSEDED BY 4-794681-6	1	28.00	21.00	25.30	24.86	16	~~1-794681-6~~
SUPERSEDED BY 4-794681-4	1	25.00	18.00	22.30	21.86	14	~~1-794681-4~~
SUPERSEDED BY 4-794681-2	1	22.00	15.00	19.30	18.86	12	~~1-794681-2~~
SUPERSEDED BY 4-794681-0	1	19.00	12.00	16.30	15.86	10	~~1-794681-0~~
SUPERSEDED BY 3-794681-8	1	16.00	9.00	13.30	12.86	8	~~794681-8~~
SUPERSEDED BY 3-794681-6	1	13.00	6.00	10.30	9.86	6	~~794681-6~~
SUPERSEDED BY 3-794681-4	1	10.00	3.00	7.30	6.86	4	~~794681-4~~
SUPERSEDED BY 3-794681-2	1	7.00	-	4.30	3.86	2	~~794681-2~~

1 MATERIAL: HOUSING - NYLON, UL 94V-0, BLACK.
CONTACT - BRASS.
0.00038 MINIMUM GOLD OVER 0.00254
MINIMUM NICKEL ON MATING AREA. 0.00254
TIN-LEAD MINIMUM OVER 0.00254 NICKEL
MINIMUM ON SOLDER TAILS.
HOLDDOWNS: PHOSPHOE BRONZE, .00254 TIN-LEAD.

2 MAXIMUM INSERTION 30 LBS.

3 RECOMMENDED BOARD THICKNESS 1.57.

4 MATERIAL: HOUSING - NYLON, UL 94V-0, BLACK.
CONTACT - BRASS.
0.00038 MINIMUM GOLD OVER 0.00254
MINIMUM NICKEL ON MATING AREA. 0.00254
MATTE TIN MINIMUM OVER 0.00254 NICKEL
MINIMUM ON SOLDER TAILS.
HOLDDOWNS: PHOSPHOE BRONZE, .00254 MATTE TIN.

THIS DRAWING IS A CONTROLLED DOCUMENT.

DIMENSIONS: mm[INCHES]

TOLERANCES UNLESS OTHERWISE SPECIFIED:
0 PLC ±-
1 PLC ±-
2 PLC ±0.20 [.008]
3 PLC ±-
4 PLC ±-
ANGLES ±-

MATERIAL 1

FINISH SEE TABLE

DWN B. HAYMAKER 17AUG99
CHK K. COBLE 17AUG99
APVD K. COBLE 17AUG99
PRODUCT SPEC -
APPLICATION SPEC -
WEIGHT -

TE Connectivity

NAME VERTICAL HEADER ASSEMBLY, THRU HOLE, 15 GOLD, DUAL ROW, MICRO MATE-N-LOK™

SIZE	CAGE CODE	DRAWING NO	RESTRICTED TO
A2	00779	C-794681	-

CUSTOMER DRAWING SCALE 4:1 SHEET 1 OF 1 REV F1

1471-9 (3/13)