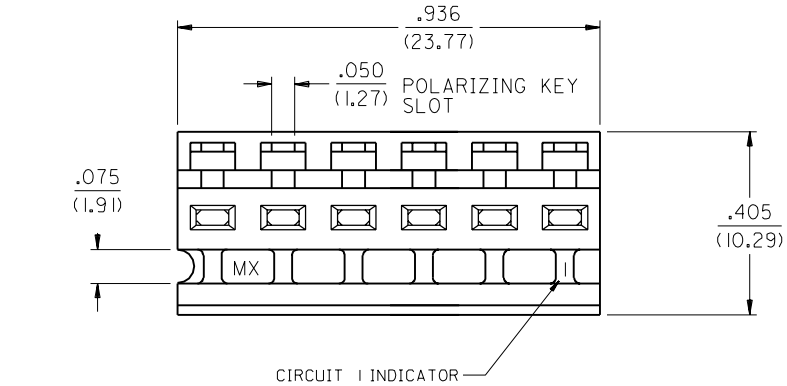

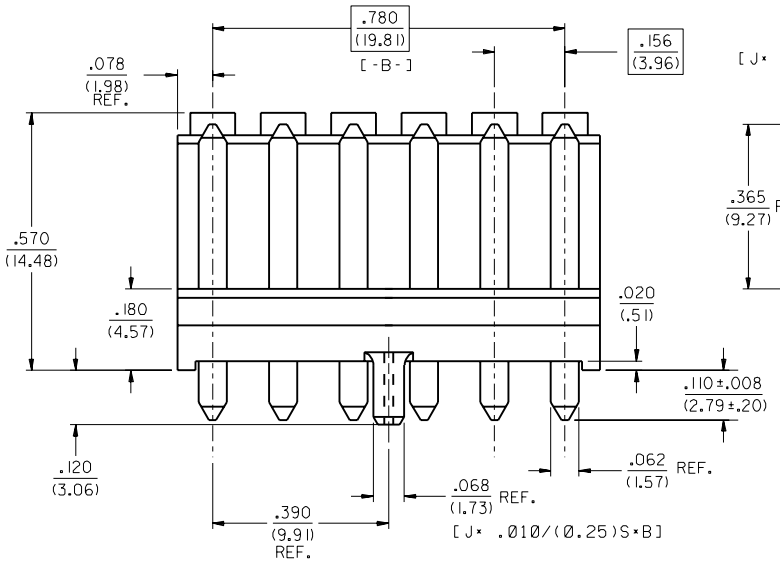

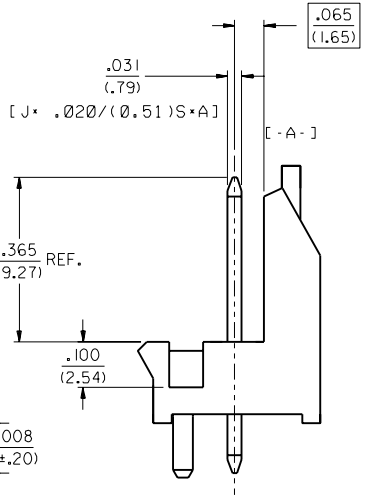

NOTES.

1. AXIAL PIN PUSHOUT FORCE 2 LBS./(0.91 KG) MIN..
2. MATERIALS:
   WAFER-POLYESTER, 15% G.F., 94V-0, COLOR: BLACK.
   PIN-BRASS, ALLOY 260.
   PLATING-POST ELECTRO-PLATE .0002 IN./(.00000508 m) MIN.
   TIN OVER .0001 IN./(.00000254 m.) MIN. COPPER
   (PER E.S. 88, CODE 102)
3. P.S. 90331 APPLIES.

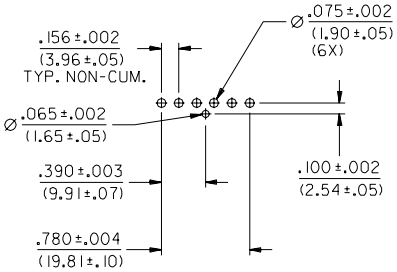

RECOMENDED
P.C.B. LAYOUT
SCALE 1:1

LTR.	REVISIONS
E	TRANSFER TO INDIA PER UDT1999-0929 SCHAFER 99/04/30
D	REDRAWN PER ECR*U30800 MJS 5-27-93

MFG. SH. REV.

DIMENSIONS SHOWN (METRIC) INCH

UNLESS OTHERWISE SPECIFIED TOLERANCES: ANGULAR ± 1/2°

	INCH	METRIC
3 PLACE	± .010	---
2 PLACE	± .014	± 0.25
1 PLACE	---	± 0.35

DRAFT WHERE APPLICABLE MUST REMAIN WITHIN DIMENSIONS

= 0 = 0 REVISE ONLY ON CAD SYSTEM

TITLE
SALES ASSEMBLY
HEADER, SINGLE ROW
6 POS. .156/(3.96) ℄

MOLEX INCORPORATED
LISLE, ILL. 60532 U.S.A.

SHEET NO. 1 | DATE 04/30/85

PART NO. 15-48-0106 | DRWG. NO. SDA-8619-0600

DRWG. BY	JTT	CHK'D. BY	JTT
APP'D. BY		SCALE	4 : 1

FILE NAME S86190600 DGN

THIS DRAWING CONTAINS INFORMATION THAT IS PROPRIETARY TO MOLEX INC. AND SHOULD NOT BE USED WITHOUT WRITTEN PERMISSION.

DIV. DA | SIZE B