DWG NO.	DO NOT SCALE	METRIC	3rd ANGLE PROJECTION
	DIMENSIONS IN mm.		

REQ. PER ASSY	ITEM	DESCRIPTION	MATERIAL	FINISH

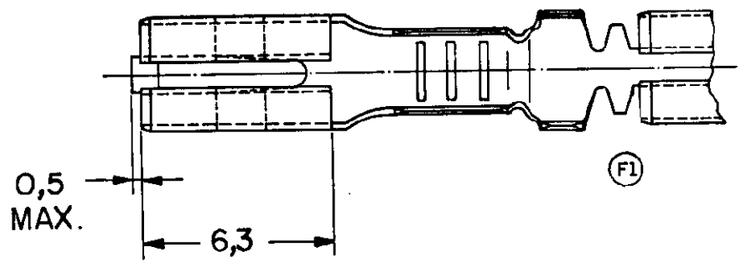

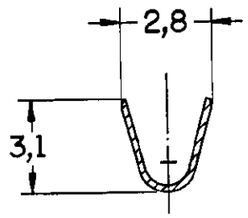

SECÇÃO A-A
SECTION

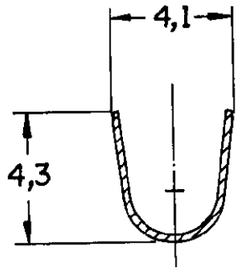

SECÇÃO B-B
SECTION

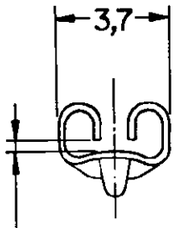

PARA **TAB** DE 0,8
ESPESSURA.
FOR 0,8 TAB.

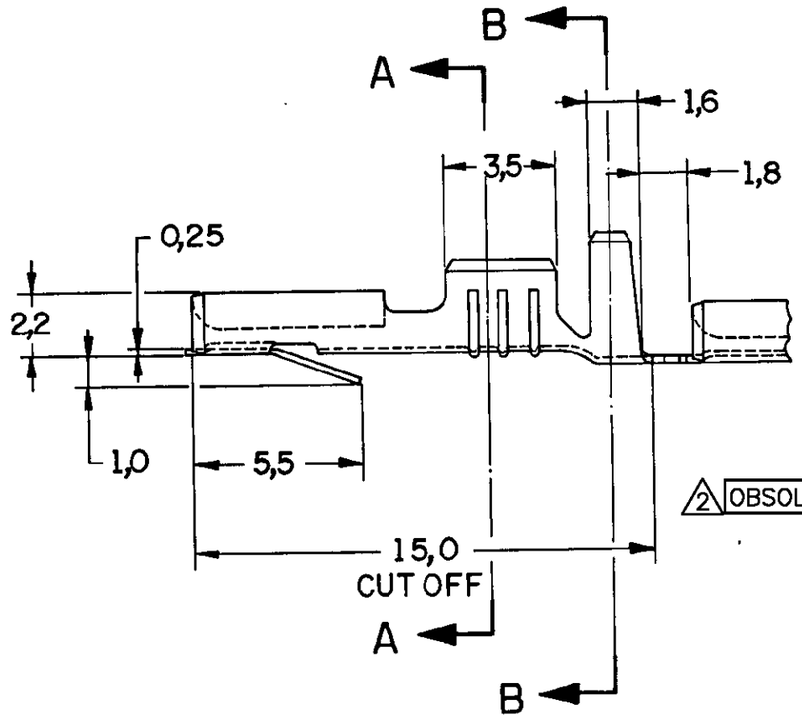

F1 F 1- LOOSE PIECE: VER DESENHO 880680
LOOSE PIECE: SEE DRAWING.

2 OBSOLETE PARTS: OBSOLETE CIS STREAMLINING PER D.RENAUD/D.SINISI

	FINISH	MATERIAL	PART NUMBER
			~~6~~
	PRÉ ESTANHADO	BRONZE FOSFOROSO	880635 -5
	PRÉ ESTANHADO	LATÃO	INATIVO -4
F1			880635 -3
	—/—	BRONZE FOSFOROSO	INATIVO ~~2~~
F1	—/—	LATÃO	880635 -1

2 OBSOLETE

CUSTOMER DWG
for REFERENCE ONLY

THIS DRAWING IS UNPUBLISHED | RELEASED FOR PUBLICATION 19
© COPYRIGHT 19 BY AMP DO BRASIL LTDA S.P. ALL INTERNATIONAL RIGHTS RESERVED AMP PRODUCTS MAY BE COVERED BY U.S. AND FOREIGN PATENTS AND/OR PATENTS PENDING.

TOLERANCES UNLESS OTHERWISE STATED
DEC. ± 0,3
ANGLES ± 1°

INS. DIA. RANGE	WIRE RANGE	SCALE
2,2 - 2,7 mm	>1,0 - 1,5 mm²	—/—

DR. N.C. LAPRESA 02-JUL-93
CHK. J.R. 20-JUL-93
DE. H. 22-JUL-93
APP.

AMP do BRASIL LTDA.
São Paulo, Brasil

DESCRIPTION .110 SERIES RECEPTACLE FASTIN - FASTON

A3 | DWG NO C 880635 | SHEET 1 OF 1

ISS	REVISION RECORD	ECN	DR / CHK	DATE
F2	REVISED PER ECO-09-026444		KK / AEG	26NOV09
F1	REVISED BY	08996	DAR / 01-APR-96	
F	ADICIONADO NOTA 2	921/93	NCL / 26.AUG.93	
E	REDRAWN WITH CHANGE 2	099/93	NCL / 19.JUL.93	