Fig. 1

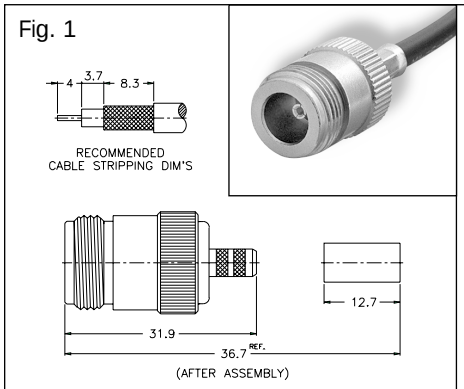

82-4429-RFX

Fig. 2

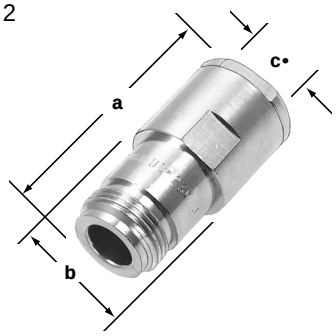

82-209-1006

Fig. 3

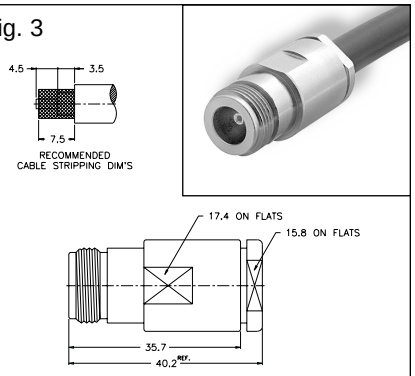

82-63

Fig. 4

36500-RFX

Fig.5

82-5376-RFX

Fig. 6

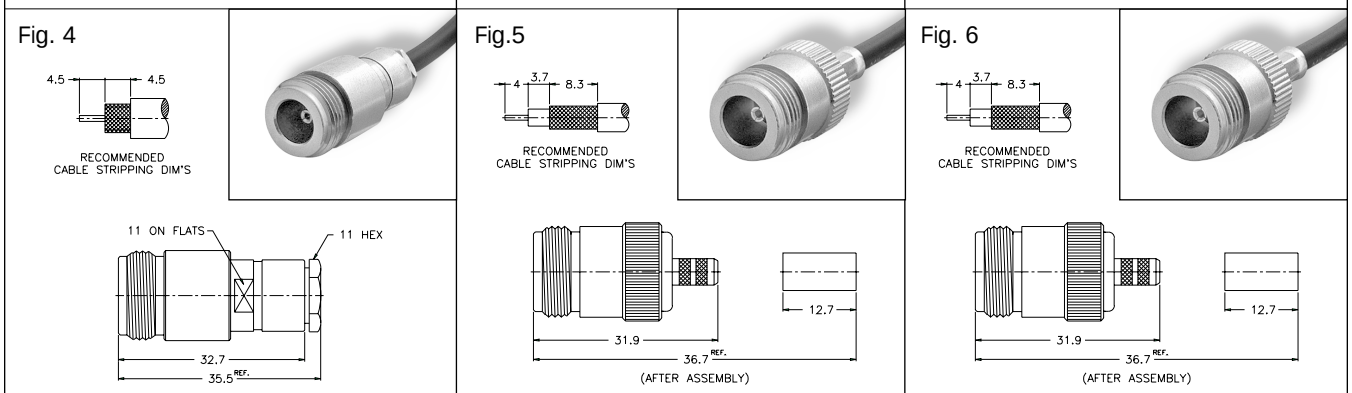

82-6092-RFX

Fig. 7

35025-RFX

Fig. 6

82-63-RFX

Fig. 9

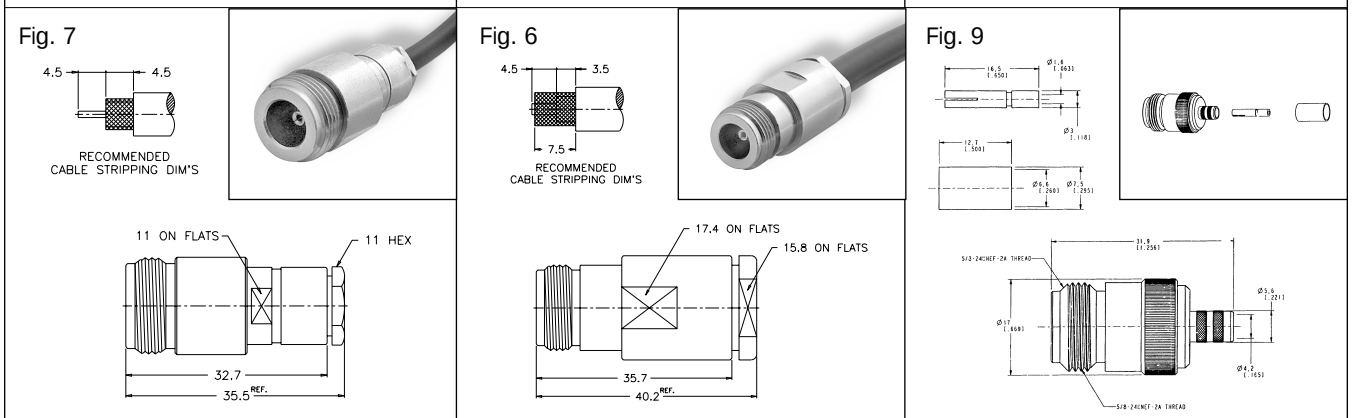

82-6158

N STRAIGHT JACKS

Cable RG-/U	Conn. Type	Cable Attachment		Dimensions, inches (millimeters)					Notes			Military Number	Amphenol Number	Fig	
		Outer	Inner	a	b	c •	d	e	CAI	Plt.	Ins.				
8, 9, 87A, 144,165,213, 214,216,225	Str.	Clamp	Solder	1.56(39.7)	.750(19.1)	.440(11.2)	—	—	C8	P1	D1	UG-23B/U	**82-63**	3	▲
B9913, Times AA-6146	Str.	Clamp	Solder	1.56(39.6)	.750(19.1)	.443(11.3)	—	—	C8	P1	D9	—	**82-209-1006**	2	
59, 62	Str.	Crimp	Crimp	1.44 (36.7)	.866 (22)	.210 (5.3)	.866 (22)	.250 (64)	—	P7	D1	—	**82-5376-RFX**	5	
59	Str.	Crimp	Crimp	1.44 (36.7)	—	—	—	—	—	P7	D1	—	**82-6092-RFX**	6	▲
58, 141	Str.	Clamp	Solder	1.90 (35.5)	.630 (16)	.212 (5.4)	—	—	—	P7	D1	—	**35025-RFX**	7	▲
8, 213, 214	Str.	Clamp	Solder	1.58 (40.2)	.750 (19)	.437 (11.1)	—	—	—	P7	D1	—	**82-63-RFX**	8	
59, 62	Str.	Clamp	Solder	.96 (24.5)	.827 (21)	.143 (3.6)	—	—	—	P7	D1	—	**36500-RFX**	4	
LMR240, 8X	Str.	Clamp	Solder	.96 (24.5)	.827 (21)	.143 (3.6)	—	—	—	P7	D1	—	**82-6158**	9	
213	Str.	Crimp	Crimp	1.44 (36.6)	.669 (17)	.440 (11.2)	—	—	—	P7	D1	—	**82-4429-RFX**	1	

• accommodates cable diameter ■ Captivated contact ★ IBM6028495 ▼ max. panel when rear mounted thru panel ▲ Distributor stocked