The product information in this catalog is for reference only. Please request the Engineering Drawing for the most current and accurate design information.
All non-RoHS products have been discontinued, or will be discontinued soon. Please check the products status on the Hirose website RoHS search at www.hirose-connectors.com, or contact your Hirose sales representative.

0.5 mm Pitch, 2.55 mm above the board, Flexible Printed Circuit & Flexible Flat Cable ZIF Connectors

FH28 Series

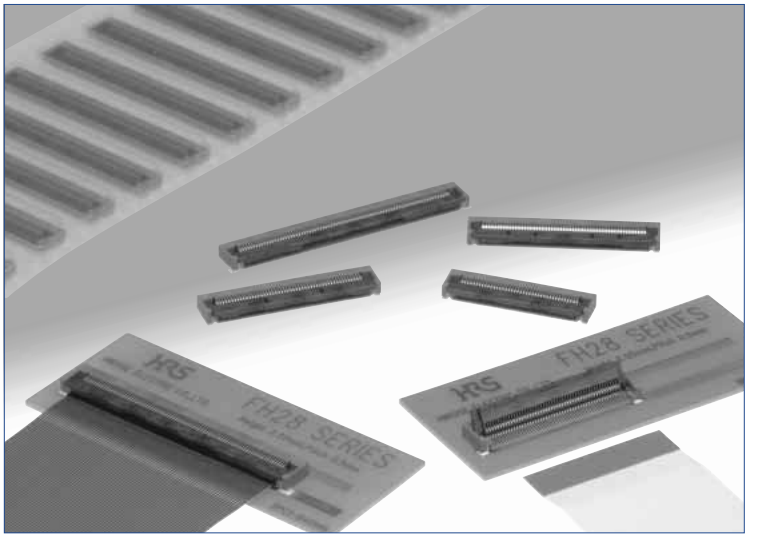

Secure actuator lock and retention

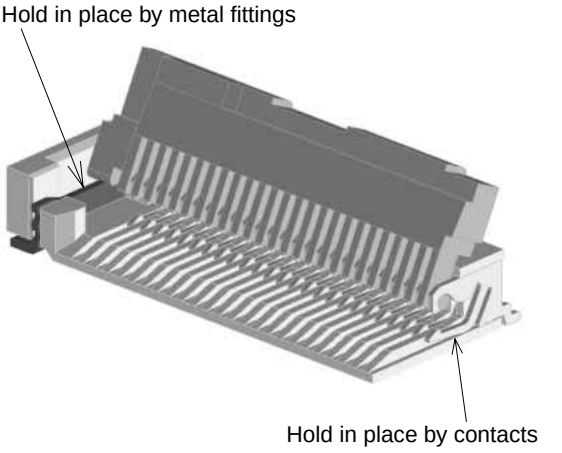

■Overview

Continuing market trends demand higher contact count connectors while maintaining high electrical/mechanical reliability, exact FPC/FFC positioning and durability.

■Features

1. Precise FFC/FPC positionining

Large angle of the actuator opening and built-in side guides in the connector allow straight and exact insertion of the FPC / FFC.

2. Rotating actuator

Proven rotating actuator system allows easy ZIF connection, confirming it with a definite tactile feel. The contact securely holds the actuator in place, providing reliable normal force. The unique contact configuration assures that the connector will remain dimensionally stable over the device's life.

3. Strong FFC / FPC retention force

Horizontal direction FFC / FPC retention force : Increased 200% (as compared with FH12 series)(30 pos.)

4. Standard FFC / FPC thickness

Reliable connection with the use of readily available 0.3 mm thick FFC/FPC.

5. Available in 20, 28, 30, 40, 45, 50, 55, 60, 64, 68, 74 and 80 contact positions.

Contact HRS for other contact positions.

6. Board placement with automatic equipment

Flat top surface and packaging on the tape-and-reel allows use of vacuum nozzles.
Standard reel contains 2,000 connectors.

FPC temporary hold protrusion

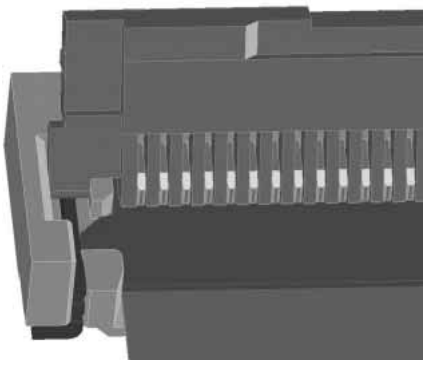

Support straight type FPC / FFC

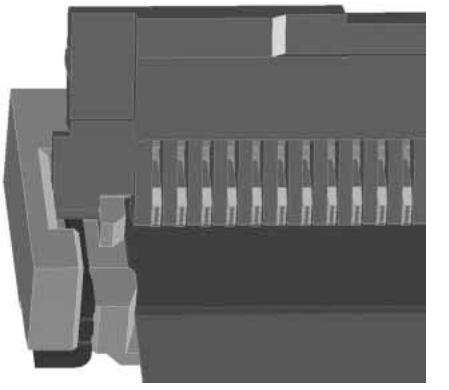

■Applications

LCD, PDP, notebook computers, HDD, video and audio equipment, OA equipment and other devices requiring high reliability ZIF connection of FFC/FPC.

The product information in this catalog is for reference only. Please request the Engineering Drawing for the most current and accurate design information.
All non-RoHS products have been discontinued, or will be discontinued soon. Please check the products status on the Hirose website RoHS search at www.hirose-connectors.com or contact your Hirose sales representative.

■Product Specifications

Rating	Rated current 0.5A DC(Note.3) Rated voltage 50V AC	Operating temperature range-40℃ to +85℃(Note 1) Operating humidity rangeRelative humidity 90% max. (No condensation)	Storage temperature range -10℃ to +50℃ (Note 2) Storage humidity range Relative humidity 90% max

Recommended FPC/FFC	Thickness: = 0.3 ± 0.05mm Gold plated contact traces

Item	Specification	Conditions
1.Insulation resistance	500 MΩ min	100 V DC
2.Withstanding voltage	No flashover or insulation breakdown.	150 V AC /one minute
3.Contact resistance	50 mΩ max. ∗ Including FPC/FFC conductor resistance	1 mA (DC or 1000Hz)
4.Durability (insertion/ withdrawal)	Contact resistance: 50 mΩ max. No damage, cracks, or parts dislocation.	20 cycles
5.Vibration	No electrical discontinuity of 1μs or more. Contact resistance: 50 mΩ max. No damage, cracks, or parts dislocation.	Frequency: 10 to 55 Hz, single amplitude of 0.75 mm, 10 cycles in each of the 3 directions.
6.Shock	No electrical discontinuity of 1μs. min. Contact resistance: 50 mΩ max. No damage, cracks, or parts dislocation.	Acceleration of 981 m/s2, 6 ms duration, sine half-wave waveform, 3 cycles in each of the 3 axis.
7.Humidity (Steady state)	Contact resistance: 50 mΩ max. Insulation resistance: 50 MΩ min. No damage, cracks, or parts dislocation.	96 hours at temperature of 40℃ and humidity of 90% to 95%.
8.Temperature cycle	Contact resistance: 50 mΩ max. Insulation resistance: 50 MΩ min. No damage, cracks, or parts looseness.	Temperature: -40℃→+15℃ to+35℃→+85℃→+15℃ to +35℃ Time: 30→2 to 3→30→2 to 3 (Minutes) 5 cycles
9.Resistance to soldering heat	No deformation of components affecting performance.	Reflow: At the recommended temperature profile Manual soldering: 350℃ ± 5℃ for 5 seconds

Note 1: Includes temperature rise caused by current flow.
Note 2: The term "storage" refers to products stored for long period of time prior to mounting and use. Operating Temperature Range and Humidity range covers non- conducting condition of installed connectors in storage, shipment or during transportation.
Note 3: When passing the current through all of the contacts,use 70% of the current rating.

■Materials / Finish

Part	Material	Finish	Remarks
Insulator	LCP	Color: Gray	UL94V-0
Actuator	LCP	Color: Black	
Contacts	Phosphor bronze	Gold plated	—
Metal fittings	Brass	Tin plated	—

■Ordering information

FH28 D - 50S - 0.5 SH (05)
❶ ❷ ❸ ❹ ❺ ❻

❶ Series name : FH28	❹ Contact pitch : 0.5 mm
❷ Blank : Standard D : Standard, dust cover attachment type H : Space saving type	❺ Terminal type SH : SMT horizontal mounting
❸ No. of contacts : 20, 28, 30, 40, 45, 50, 55, 60, 64, 68, 74, 80	❻ Plating code specifications (05): Gold

The product information in this catalog is for reference only. Please request the Engineering Drawing for the most current and accurate design information.
All non-RoHS products have been discontinued or will be discontinued soon. Please check the products status on the Hirose website RoHS search at www.hirose-connectors.com or contact your Hirose sales representative.

◆Operation and Precautions

Operation	Precautions
1.FPC/FFC insertion procedure. Connector installed on the board. ❶ Lift up the actuator. Use thumb or index finger 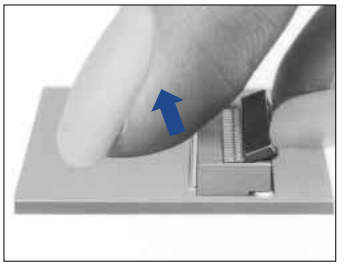	❶ Do not force the actuator to open beyond its fully open position. Do not use any type of tool to open the actuator. 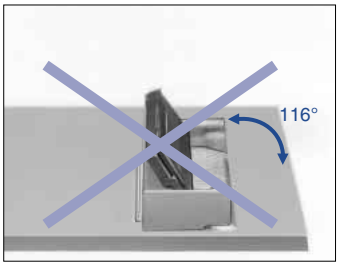
❷ Fully insert the FPC in the connector parallel to mounting surface, with the exposed conductive traces facing down. 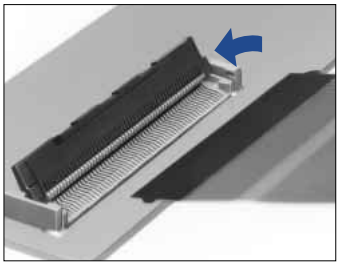	❷ Do not forcefully bend the FFC/FPC upward. Consult FFC/FPC manufacturer for the recommended bend radiuses. 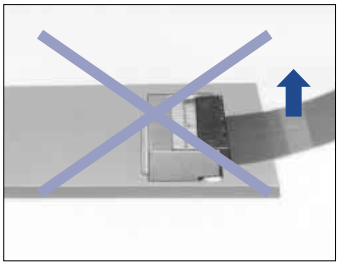
❸ Rotate down the actuator until firmly closed. It is critical that the inserted FPC/FFC is not moved and remains fully inserted. 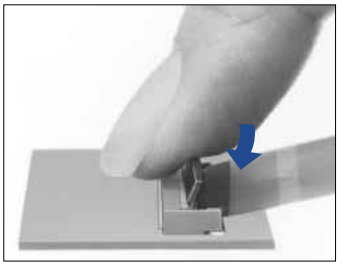	❸ For connectors with multiple contacts, such as 80 pos. rotate down the actuator pushing at both ends. 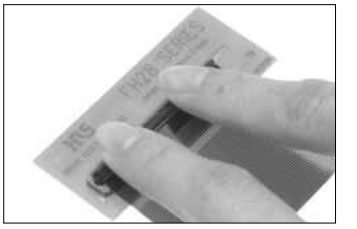
2.FPC/FFC removal Fully open the actuator. Carefully withdraw the FPC/FFC exercising caution not to deform or damage it. 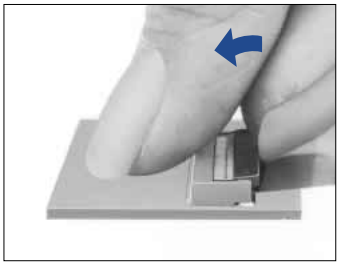	

The product information in this catalog is for reference only. Please request the Engineering Drawing for the most current and accurate design information.
All non-RoHS products have been discontinued, or will be discontinued soon. Please check the products status on the Hirose website RoHS search at www.hirose-connectors.com or contact your Hirose sales representative.

Connector Dimensions

Standard type

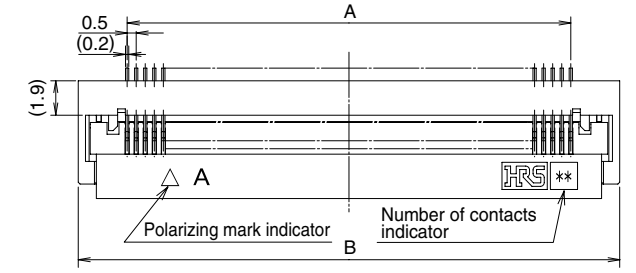

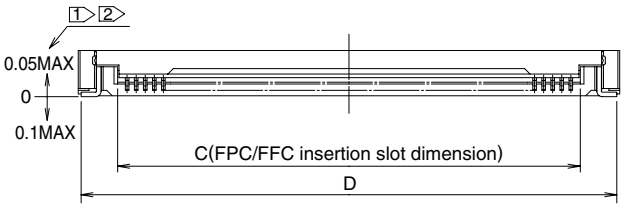

[Dust cover attachment type]

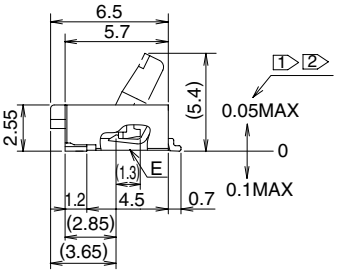

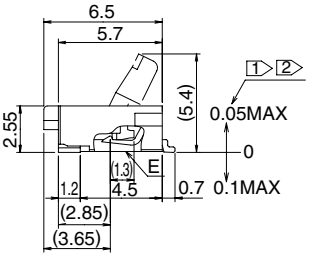

Notes

1 The coplanarity of each terminal lead is within 0.1.

2 The contact terminal lead position indicates the dimension from the E surface, the bottom surface of the insulator body.

3 Sight variations in color of the plastic compounds do not affect form, fit or function.

Unit: mm

Part Number	CL No.	Number of contacts	A	B	C	D	RoHS
FH28D-20S-0.5SH(05)	CL586-1823-5-05	20	9.5	14.9	10.57	14.58	YES
FH28D-28S-0.5SH(05)	CL586-1835-4-05	28	13.5	18.9	14.57	18.58	
FH28D-30S-0.5SH(05)	CL586-1827-6-05	30	14.5	19.9	15.57	19.58	
FH28-40S-0.5SH(05)	CL586-1803-8-05	40	19.5	24.9	20.57	24.58	
FH28-45S-0.5SH(05)	CL586-1848-6-05	45	22.0	27.4	23.07	27.08	
FH28D-50S-0.5SH(05)	CL586-1808-1-05	50	24.5	29.9	25.57	29.58	
FH28D-55S-0.5SH(05)	CL586-1821-0-05	55	27.0	32.4	28.07	32.08	
FH28-60S-0.5SH(05)	CL586-1811-6-05	60	29.5	34.9	30.57	34.58	
FH28D-64S-0.5SH(05)	CL586-1813-1-05	64	31.5	36.9	32.57	36.58	
FH28D-68S-0.5SH(05)	CL586-1819-8-05	68	33.5	38.9	34.57	38.58	
FH28D-74S-0.5SH(05)	CL586-1828-9-05	74	36.5	41.9	37.57	41.58	

Note 1: Tape and reel packaging (2,000 pieces/reel).
Order by number of reels.

Note 2: Metal fittings protruded type (FH28E) is available.
Contact Hirose for details.

The product information in this catalog is for reference only. Please request the Engineering Drawing for the most current and accurate design information.
All non-RoHS products have been discontinued or will be discontinued soon. Please check the products status on the Hirose website RoHS search at www.hirose-connectors.com or contact your Hirose sales representative.

Space saving type

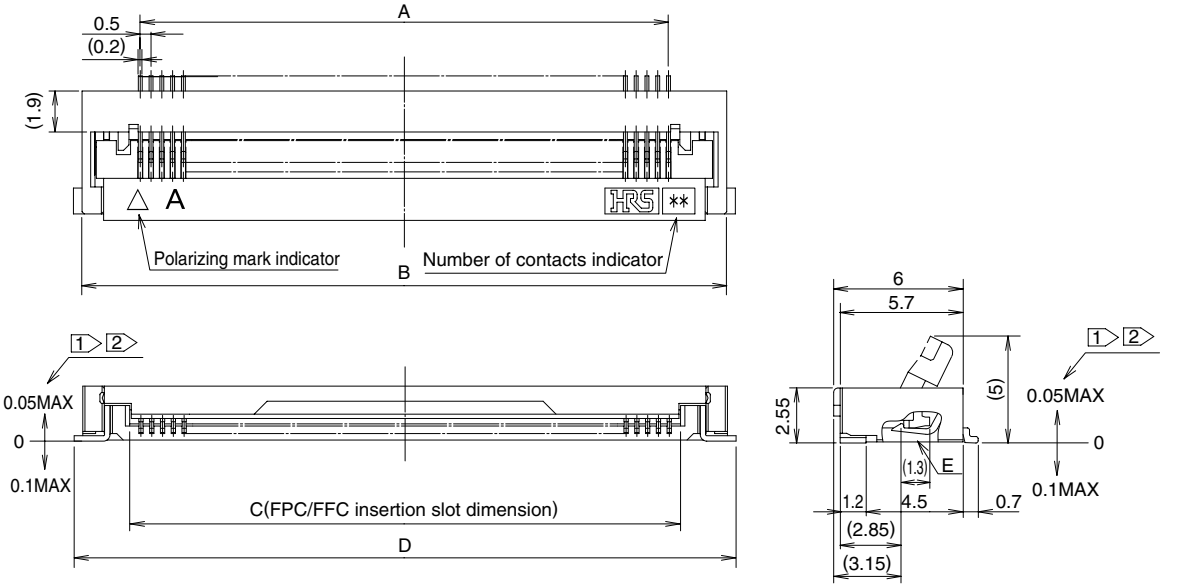

Notes

1 The coplanarity of each terminal lead is within 0.1.

2 The contact terminal lead position indicates the dimension from the E surface, the bottom surface of the insulator body.

3 Sight variations in color of the plastic compounds do not affect form, fit or function.

Unit: mm

Part Number	CL No.	Number of contacts	A	B	C	D	RoHS
FH28H-80S-0.5SH(05)	586-1805-3-05	80	39.5	44.9	40.57	45.7	YES

Tape and reel packaging (2,000 pieces/reel).
Order by number of reels.

The product information in this catalog is for reference only. Please request the Engineering Drawing for the most current and accurate design information.
All non-RoHS products have been discontinued, or will be discontinued soon. Please check the products status on the Hirose website RoHS search at www.hirose-connectors.com or contact your Hirose sales representative.

◆Recommended PCB mounting pattern and metal mask dimensions

Recommended metal mask thickness: 0.15 mm.

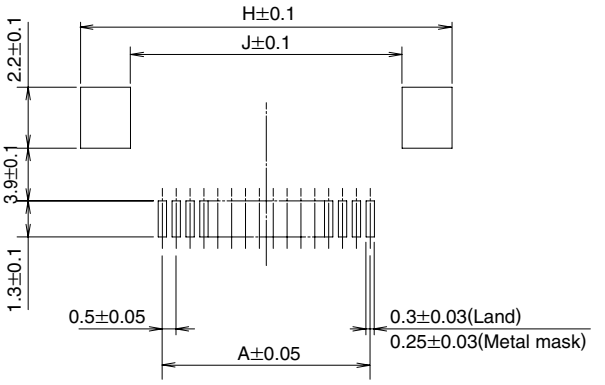

Standard type(FH28, FH28D)

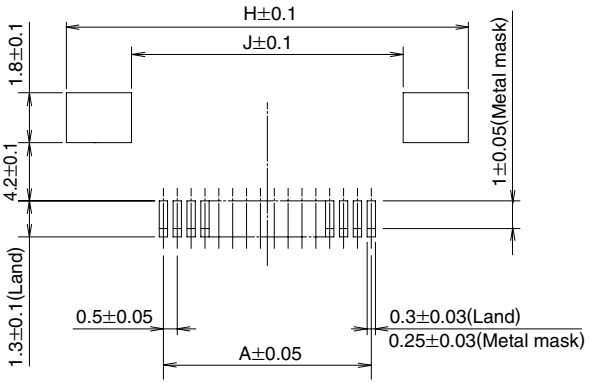

Space saving type(FH28H)

◆Recommended FPC/FFC dimensions

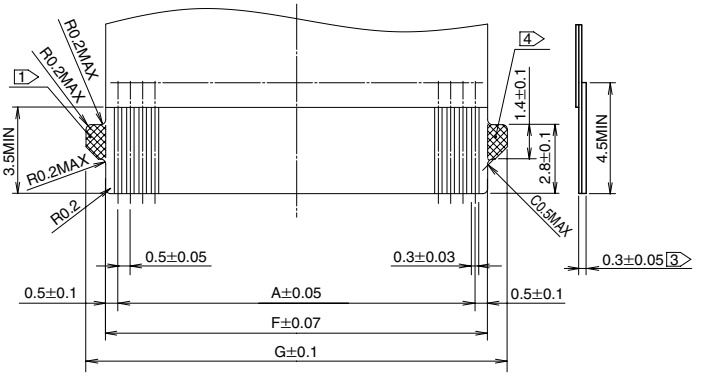

Notes

1 Straight type FPC / FFC does not have the side-protruding retention tabs (cross-hatched areas).

2 Polyimide and thermally hardening adhesive is recommended as the materials for stiffener.

Unit: mm

Part Number	CL No.	Number of contacts	F	G	H	J
FH28D-20S-0.5SH(05)	CL586-1823-5-05	20	10.5	12.1	15.6	12.0
FH28D-28S-0.5SH(05)	CL586-1835-4-05	28	14.5	16.1	19.6	16.0
FH28D-30S-0.5SH(05)	CL586-1827-6-05	30	15.5	17.1	20.6	17.0
FH28-40S-0.5SH(05)	CL586-1803-8-05	40	20.5	22.1	25.6	22.0
FH28-45S-0.5SH(05)	CL586-1848-6-05	45	23.0	24.6	28.1	24.5
FH28D-50S-0.5SH(05)	CL586-1808-1-05	50	25.5	27.1	30.6	27.0
FH28D-55S-0.5SH(05)	CL586-1821-0-05	55	28.0	29.6	33.1	29.5
FH28-60S-0.5SH(05)	CL586-1811-6-05	60	30.5	32.1	35.6	32.0
FH28D-64S-0.5SH(05)	CL586-1813-1-05	64	32.5	34.1	37.6	34.0
FH28D-68S-0.5SH(05)	CL586-1819-8-05	68	34.5	36.1	39.6	36.0
FH28D-74S-0.5SH(05)	CL586-1828-9-05	74	37.5	39.1	42.6	39.0
FH28H-80S-0.5SH(05)	CL586-1805-3-05	80	40.5	42.1	46.7	42.0

◆Packaging specification

● Embossed carrier tape dimensions

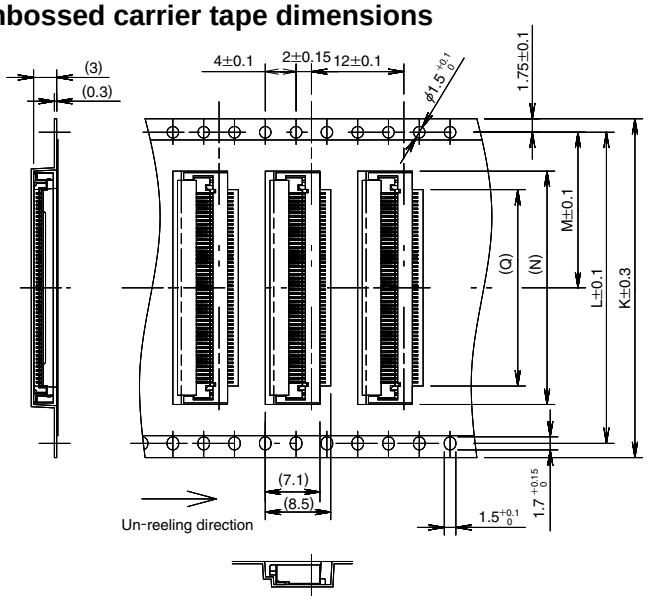

Standard (FH28,FH28D)

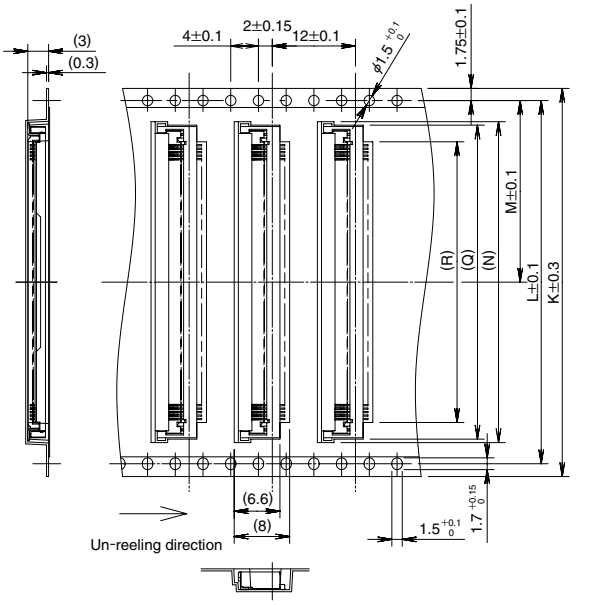

Space saving type (FH28H)

●Reel Dimensions

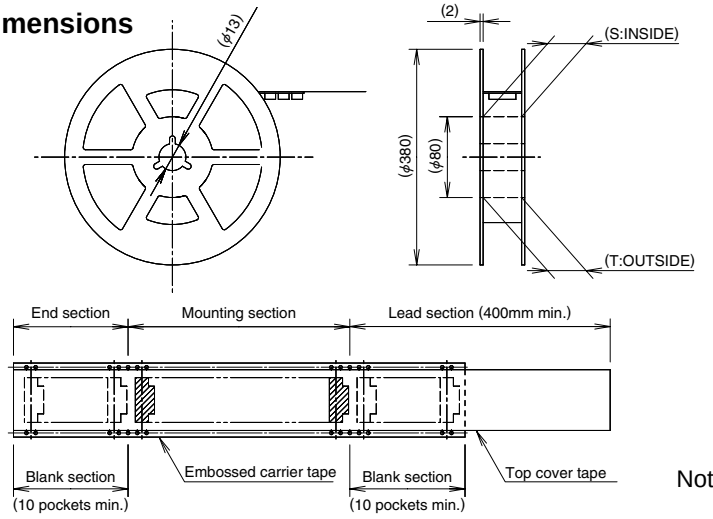

Note : 2,000 pieces per reel.

Standard (FH28,FH28D)

Unit: mm

Part Number	CL No.	Number of contacts	K	L	M	N	Q	S	T
FH28D-20S-0.5SH(05)	CL586-1823-5-05	20	24	—	11.5	15.3	10.5	25.4	29.4
FH28D-28S-0.5SH(05)	CL586-1835-4-05	28	32	28.4	14.2	19.3	14.5	33.4	37.4
FH28D-30S-0.5SH(05)	CL586-1827-6-05	30	32	28.4	14.2	20.3	15.5	33.4	37.4
FH28-40S-0.5SH(05)	CL586-1803-8-05	40	44	40.4	20.2	25.3	20.5	33.4	37.4
FH28-45S-0.5SH(05)	CL586-1848-6-05	45	44	40.4	20.2	27.8	23.0	45.4	49.4
FH28D-50S-0.5SH(05)	CL586-1808-1-05	50	44	40.4	20.2	30.3	25.5	45.4	49.4
FH28D-55S-0.5SH(05)	CL586-1821-0-05	55	44	40.4	20.2	32.8	28.0	45.4	49.4
FH28-60S-0.5SH(05)	CL586-1811-6-05	60	56	52.4	26.2	35.3	30.5	57.4	61.4
FH28D-64S-0.5SH(05)	CL586-1813-1-05	64	56	52.4	26.2	37.3	32.5	57.4	61.4
FH28D-68S-0.5SH(05)	CL586-1819-8-05	68	56	52.4	26.2	39.3	34.5	57.4	61.4
FH28D-74S-0.5SH(05)	CL586-1828-9-05	74	56	52.4	26.2	43.3	42.3	57.4	61.4

Space saving type (FH28H)

Unit: mm

Part Number	CL No.	Number of contacts	K	L	M	N	Q	R	S	T
FH28H-80S-0.5SH(05)	CL586-1805-3-05	80	56	52.4	26.2	46.3	45.3	40.5	57.4	61.4

The product information in this catalog is for reference only. Please request the Engineering Drawing for the most current and accurate design information.
All non-RoHS products have been discontinued, or will be discontinued soon. Please check the products status on the Hirose website RoHS search at www.hirose-connectors.com or contact your Hirose sales representative.

◆Recommended Temperature Profile

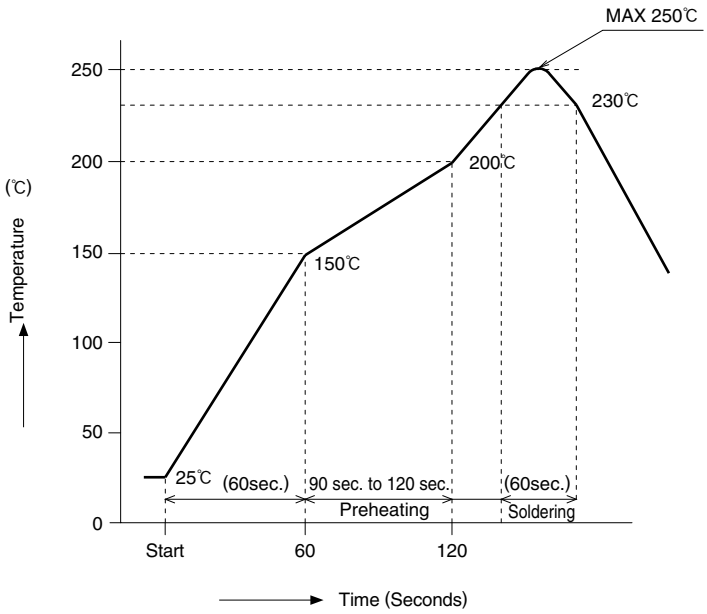

HRS test condition

Solder method	:Reflow, IR
Solder composition	:Paste, 96.5%Sn/3.0%Ag/0.5%Cu (Flux content 11wt%)
Test board	:Glass epoxy 55mm×150mm×1.6mm thick
Metal mask	:0.15mm thick

The temperature profiles are based on the above conditions.

In individual applications the actual temperature may vary, depending on solder paste type, volume/thickness and board size/thickness. Consult your solder paste and equipment manufacturer for specific recommendations.

The product information in this catalog is for reference only. Please request the Engineering Drawing for the most current and accurate design information.
All non-RoHS products have been discontinued or will be discontinued soon. Please check the products status on the Hirose website RoHS search at www.hirose-connectors.com or contact your Hirose sales representative.

◆FH28 Series FPC Construction (Recommended Specifications)

1. Using Single-sided FPC

FPC : Flexible Printed Circuit

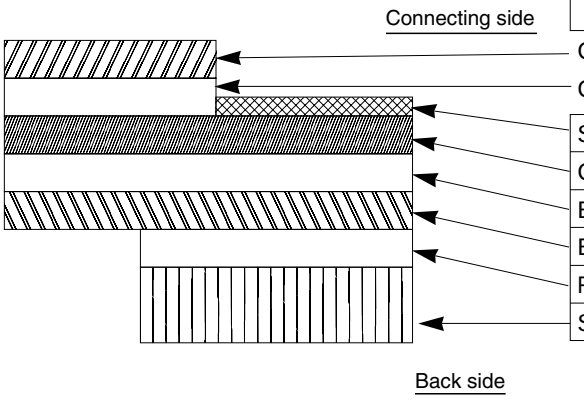

Material Name	Material	Thickness (μm)
Covering film layer.	Polyimide 1 mil thick.	25
Cover adhesive		25
Surface treatment	0.2μm thick gold plated over 1 to 5μm thick nickel underplating	3
Copper foil	Cu 1oz	35
Base adhesive		25
Base film	Polyimide 1 mil thick	25
Reinforcement material adhesive	Thermosetting adhesive	30
Stiffener	Polyimide 3 mil thick	175
	Total	293

2. Using Double-sided FPC

FPC : Flexible Printed Circuit

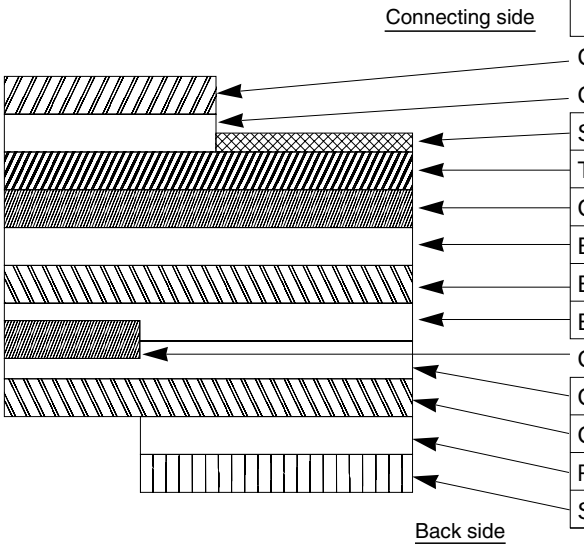

Material Name	Material	Thickness (μm)
Covering layer film	Polyimide 1 mil thick	
Cover adhesive		
Surface treatment	0.2μm thick gold plated over 1 to 5μm thick nickel underplating	3
Through-hole copper	Cu	15
Copper foil	Cu 1/2oz	18
Base adhesive		18
Base film	Polyimide 1 mil thick	25
Base adhesive		18
Copper foil	Cu 1/2oz	18
Cover adhesive		25
Covering layer film	Polyimide 1 mil thick	25
Reinforcement material adhesive	Thermosetting adhesive	50
Stiffener	Polyimide 1 mil thick	100
	Total	297

∗ To prevent release of the lock due to FPC bending, use of the FPC with copper foil on the back side is NOT RECOMMENDED.

3. Using FFC

FFC : Flexible Flat Cable

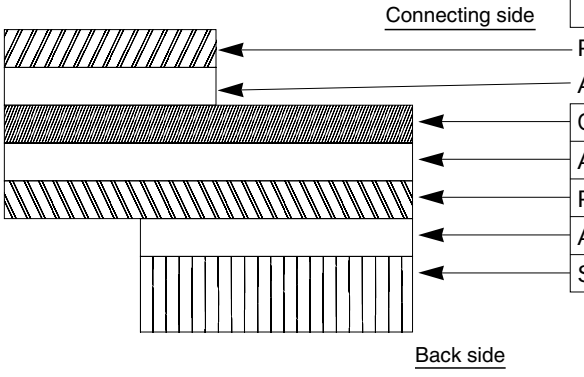

Material Name	Material	Thickness (μm)
Polyester film		12
Adhesive	Thermoplastic polyester	30
Gold plated annealed copper foil		35
Adhesive	Polyester	30
Polyester		12
Adhesive	Polyester	30
Stiffener	Polyester	188
	Total	295

Note: Recommended FPC thickness specification: 0.3 ± 0.05 mm