THIS DRAWING IS UNPUBLISHED. RELEASED FOR PUBLICATION -,-
© COPYRIGHT - BY TYCO ELECTRONICS CORPORATION. ALL RIGHTS RESERVED.

LOC	DIST
GP	0

REVISIONS

P	LTR	DESCRIPTION	DATE	DWN	APVD
	A	RELEASED PER EC 0512-0488-04	8DEC04	RR	MY

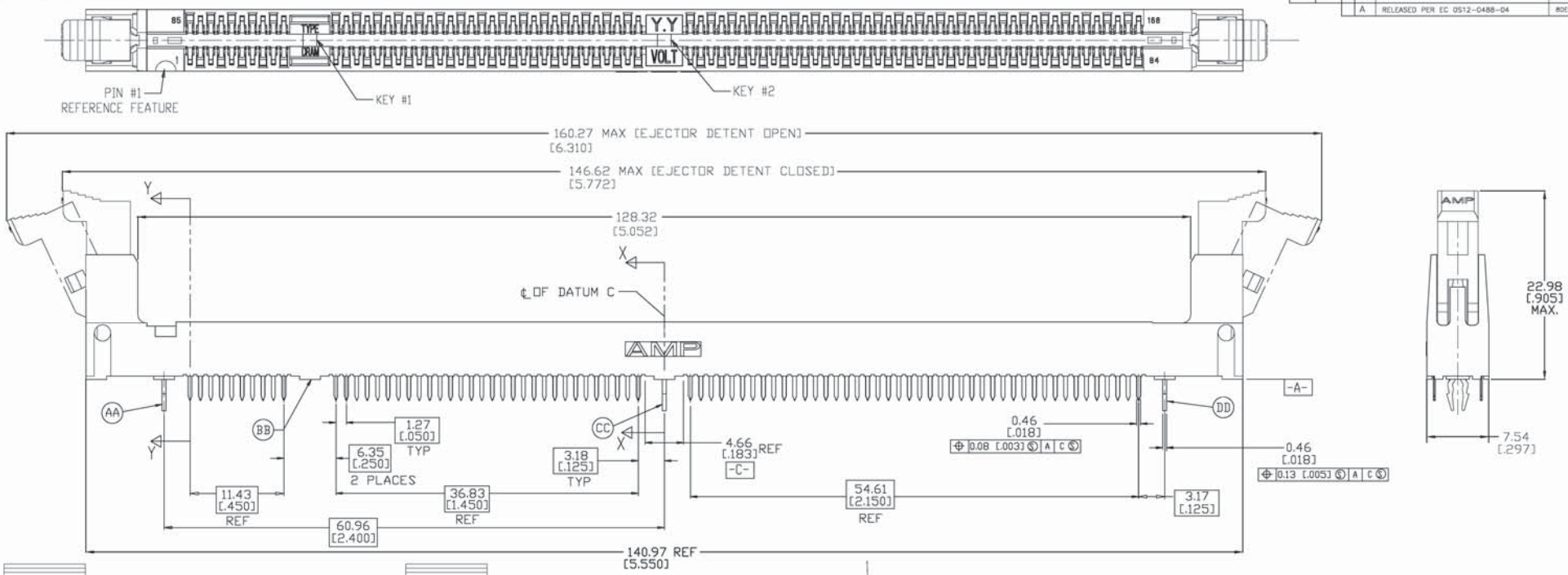

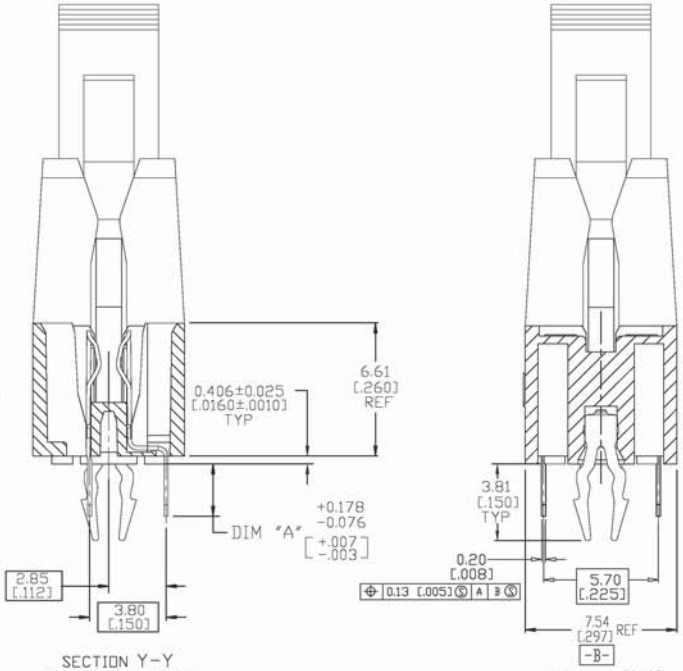

SECTION Y-Y
CIRCUITS 1 AND 51
SCALE 8:1

SECTION X-X
SCALE 8:1

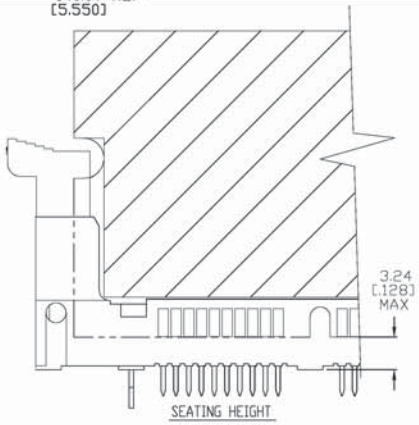

SEATING HEIGHT

1. MATERIAL
HOUSING: GLASS FILLED HIGH TEMPERATURE NYLON, COLOR: BLACK.
CONTACT: PHOS. BRONZE, C51100, TEMPER H06.
RETENTION POST: STAINLESS STEEL, AMP SPEC 100-309.

2. FINISH
CONTACT:
NICKEL PLATE ALL OVER 0.00127mm - 0.0019mm [.000050 IN -.000075 IN] THICK.
PER AMP SPEC 112-25-2.
GOLD PLATE IN INTERFACE AREA PER AMP SPEC 112-162-5.
SEE TABLE FOR MIN. THICKNESS.
MATTE TIN PLATE IN SOLDERTAIL AREA 0.00381mm - 0.00635mm [.000150 IN -.000250 IN] THICK.
PER AMP SPEC 112-65-1.

3. EXTRACTOR MATERIAL: GLASS FILLED HIGH TEMPERATURE NYLON, COLOR: NATURAL, OFF-WHITE.

4. EXTRACTOR MATERIAL: POLYSULFONE, COLOR: AMBER, CLEAR

DIM "A"	RETENTION POST LOCATION	KEY #1	KEY #2	EXTRACTOR MATERIAL	GOLD PLATE THICKNESS	DESCRIPTION	PART NUMBER
4.06 [.160]	BB-CC-DD	DETAIL-C	DETAIL-A	3	0.00076mm [.000030 IN]	NON-BUFFERED DRAM, 3.3 VOLT, POST-PLATED CONTACTS	1-5390169-3
4.06 [.160]	AA-CC-DD	DETAIL-C	DETAIL-A	3	0.00076mm [.000030 IN]	NON-BUFFERED DRAM, 3.3 VOLT, POST-PLATED CONTACTS	1-5390169-2
4.06 [.160]	AA-CC-DD	DETAIL-C	DETAIL-A	4	0.00076mm [.000030 IN]	NON-BUFFERED DRAM, 3.3 VOLT, POST-PLATED CONTACTS	1-5390169-1

THIS DRAWING IS A CONTROLLED DOCUMENT.

DWN R.RICHARDSON 8DEC04
CHK M.YEOMANS 8DEC04
APVD —

DIMENSIONS: INCHES [MM] — TOLERANCES UNLESS OTHERWISE SPECIFIED: 0 PLC ±.—; 1 PLC ±.—; 2 PLC ±.0.13 [.005]; 3 PLC ±.—; 4 PLC ±.—; ANGLES ±.—

MATERIAL 1 — FINISH 2

PRODUCT SPEC —
APPLICATION SPEC —
WEIGHT —

tyco Electronics — Tyco Electronics Corporation, Harrisburg, PA

NAME: SOCKET ASSEMBLY, DIMM2P, LOW INSERTION FORCE, 168 POSITION, POST-PLATED LEAD FREE

SIZE	CAGE CODE	DRAWING NO	RESTRICTED TO
A1	00779	C-5390169	—

CUSTOMER DRAWING — SCALE 1:1 — SHEET 1 OF 3 — REV A

THIS DRAWING IS UNPUBLISHED. RELEASED FOR PUBLICATION -,-
© COPYRIGHT - BY TYCO ELECTRONICS CORPORATION. ALL RIGHTS RESERVED.

LOC	DIST
GP	0

REVISIONS

P	LTR	DESCRIPTION	DATE	DWN	APVD
	–	SEE SHEET 1	–	–	–

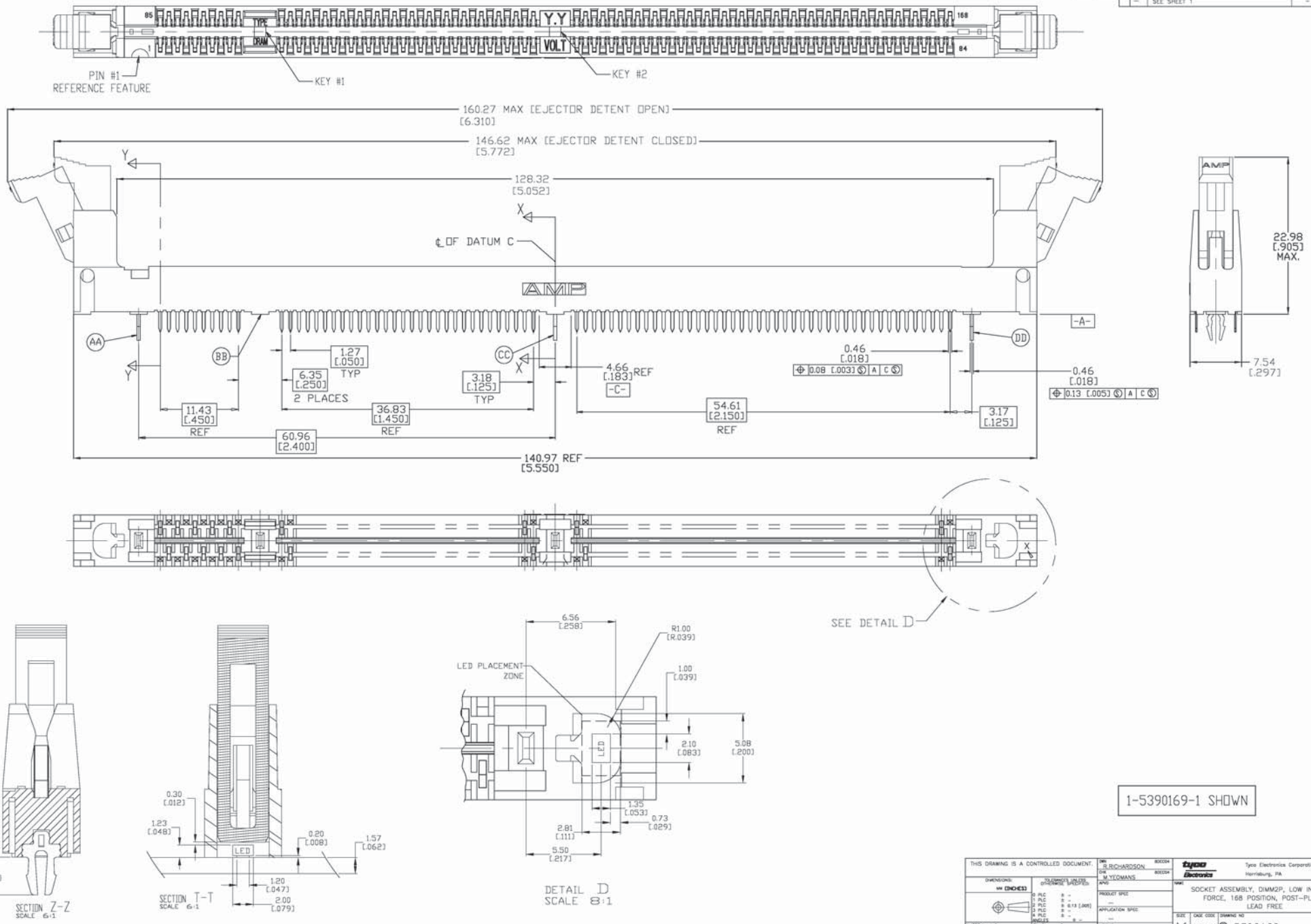

1-5390169-1 SHOWN

THIS DRAWING IS A CONTROLLED DOCUMENT.	DWN R.RICHARDSON 80ECO4	tyco Electronics	Tyco Electronics Corporation Harrisburg, PA
DIMENSIONS: IN INCHES	CHK M.YEOMANS 80ECO4	NAME: SOCKET ASSEMBLY, DIMM2P, LOW INSERTION FORCE, 168 POSITION, POST-PLATED LEAD FREE	
TOLERANCES UNLESS OTHERWISE SPECIFIED: 0 PLC ±.– ; 1 PLC ±.– ; 2 PLC ±.010 [.005] ; 3 PLC ±.– ; 4 PLC ±.– ; ANGLES ±.–	APVD —	PRODUCT SPEC —	
		APPLICATION SPEC —	SIZE A1 · CAGE CODE 00779 · DRAWING NO C-5390169 · RESTRICTED TO —
MATERIAL 1	FINISH 2	WEIGHT —	CUSTOMER DRAWING · SCALE 1:1 · SHEET 2 OF 3 · REV A

THIS DRAWING IS UNPUBLISHED. RELEASED FOR PUBLICATION -,-
© COPYRIGHT - BY TYCO ELECTRONICS CORPORATION. ALL RIGHTS RESERVED.

LOC	DIST
GP	0

REVISIONS

P	LTR	DESCRIPTION	DATE	DWN	APVD
	–	SEE SHEET 1	–	–	–

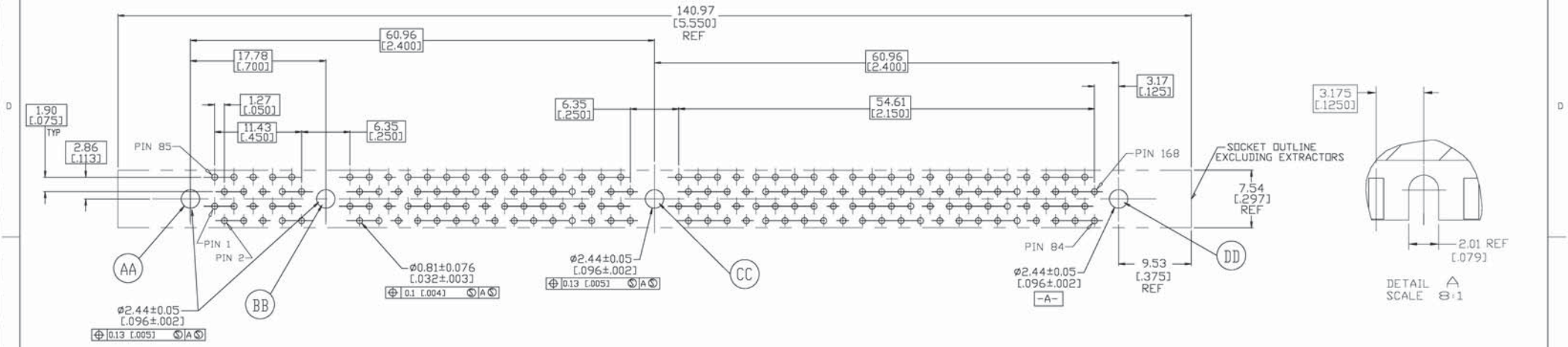

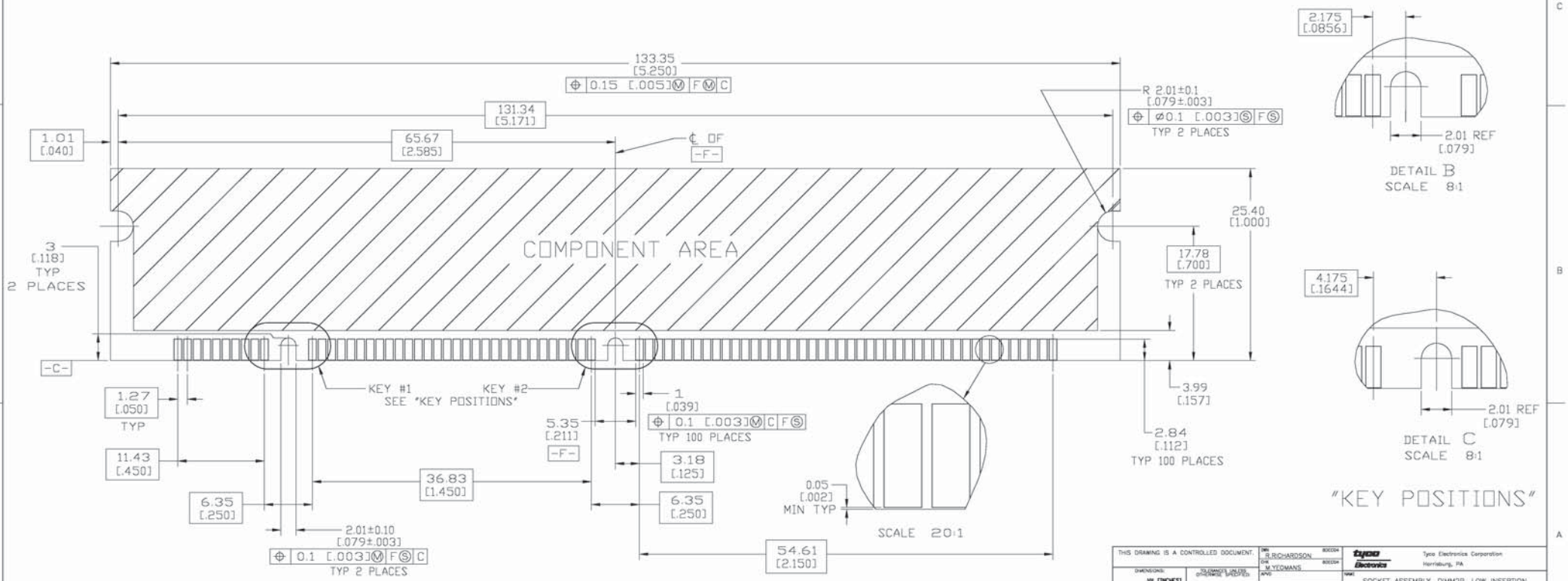

RECOMMENDED MODULE LAYOUT

SEE JEDEC SPEC. MO-161 FOR COMPLETE MODULE DETAILS,
1.27±0.10[.050±.004] THICK ACROSS PADS

THIS DRAWING IS A CONTROLLED DOCUMENT.

DIMENSIONS: MM [INCHES]

TOLERANCES UNLESS OTHERWISE SPECIFIED
0 PLC ± –
1 PLC ± –
2 PLC ± 0.13 [.005]
3 PLC ± –
4 PLC ± –
ANGLES ± –

MATERIAL –
FINISH –

DWN R.RICHARDSON 80ECDH
CHK M.YEOMANS 80ECDH
APVD –
PRODUCT SPEC –
APPLICATION SPEC –
WEIGHT –

Tyco Electronics Corporation
Harrisburg, PA

NAME: SOCKET ASSEMBLY, DIMM2P, LOW INSERTION FORCE, 168 POSITION, POST PLATED LEAD FREE

SIZE	CAGE CODE	DRAWING NO	RESTRICTED TO
A1	00779	C-5390169	–

CUSTOMER DRAWING | SCALE 1:1 | SHEET 3 OF 3 | REV A