KYCON, Inc. 1810 Little Orchard Street, San Jose, CA 95125 (408)494-0330

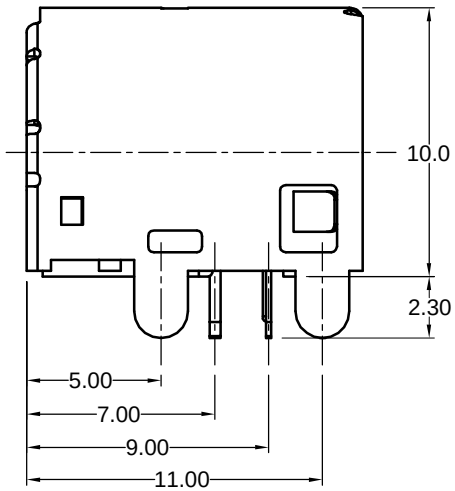

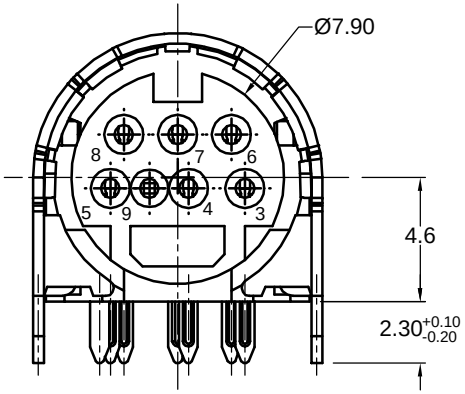

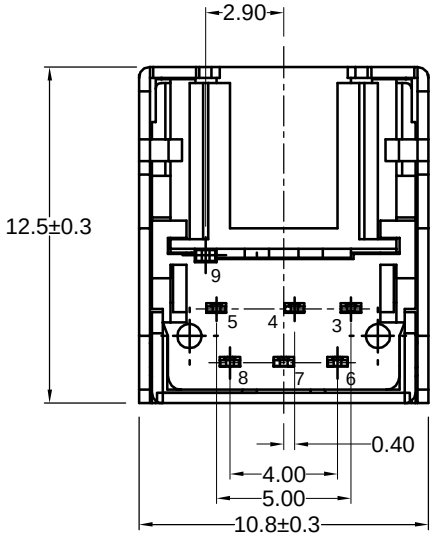

Recommended PCB Layout
<Bottom View>

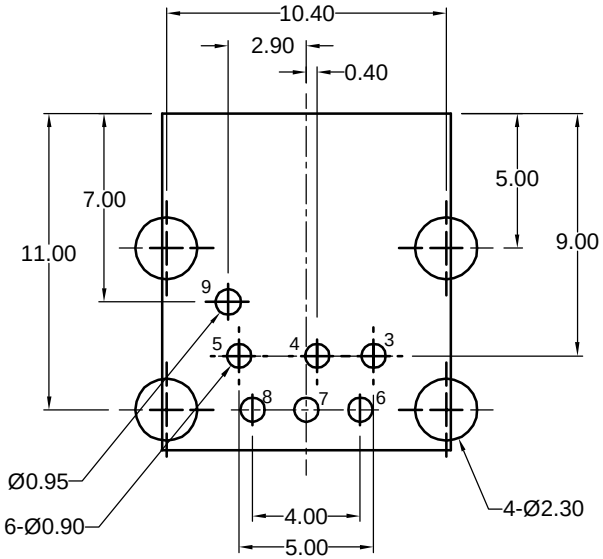

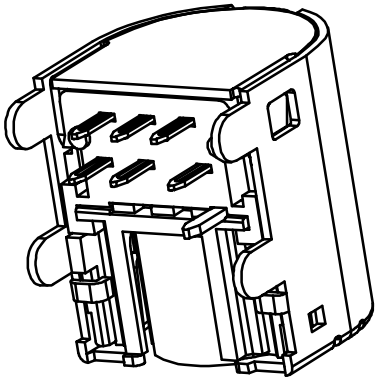

Material and Finish

Body: PBT Thermoplastic, UL94V-0 Rated

Color: Black

Contacts: Phosphor Bronze
Gold Flash on Contacts,
Tin/Lead on Termination

Shield: SPCC, Tin Plated

Electrical Characteristics

Contact Resistance:
Before Durability Test:
Plug to Shield: 50 Milliohms Max.
Plug to Contacts: 30 Milliohms Max.

After Durability Test:
Plug to Shield: 100 Milliohms Max.
Plug to Contacts: 60 Milliohms Max.

Insulation Resistance:
50 Megohms Min.

Dielectric Withstanding Voltage:
500V AC RMS For 1 Minute

Current Rating:
2 Amps at 12V DC

Mechanical Characteristics

Durability: 500 Cycles Min.

Insertion Force: 0.4kg ~ 4.5kg

Extraction Force: 0.4kg ~ 4.5kg

Operating Temperature: -25°C to +85°C

C US
LR78160

Tolerances
X.X ± 0.25
X.XX ± 0.15
Unless Stated Otherwise

REV.	DATE	DESCRIPTION	REV. BY	CHK. BY
A0	04/26/02	New Drawing	M. Yiu	K. Wallace
A1	06/26/02	Release DWG	M. Yiu	K. Wallace
A2	8/1/02	Ref. ECO 02-082	K. Wallace	K. Wallace

DRAWN BY	DATE
M. Yiu	04/26/02
	UNITS
	mm

KMDR-GEO-7S-BS

Mini-DIN, 7 Pos, GEO Type

Right Angle, Fully Shielded, Rounded

KYCON

Mouser Electronics

Authorized Distributor

Click to View Pricing, Inventory, Delivery & Lifecycle Information:

Kycon:
KMDR-GEO-7S-BS