THIS DRAWING IS UNPUBLISHED. RELEASED FOR PUBLICATION -,- .
© COPYRIGHT - BY TYCO ELECTRONICS CORPORATION. ALL RIGHTS RESERVED.

LOC	DIST
CM	0

REVISIONS

P	LTR	DESCRIPTION	DATE	DWN	APVD
	S	EC 0G3B 0249 05	27SEP05	BSV	RCJ
	S1	REVISED PER ECO-10-000443	15JAN10	KK	AEG

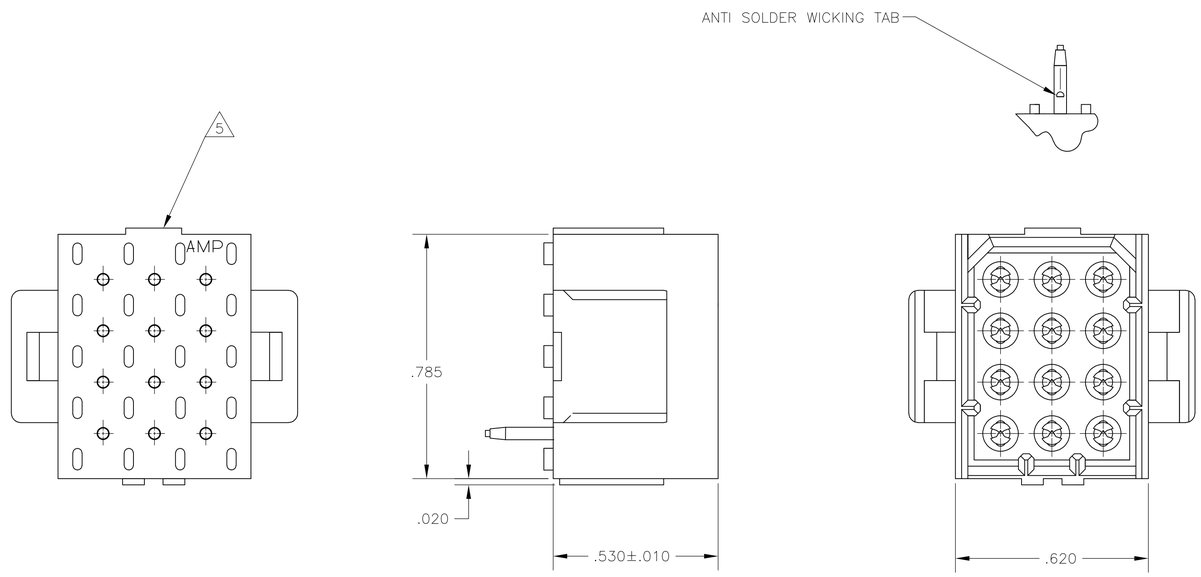

1. FITS SOCKET HOUSING 640522.
2. ASSEMBLY CONFORMS TO AMP SOLDERABILITY SPEC. 109-11-3.
3. FOR USE WITH .063 THICK P.C. BOARD.
4. CONTACT IS PLATED OVERALL WITH.000050 NICKEL, THEN .000030 GOLD OVER CONTACT LENGTH INDICATED AND .000150 MATTE TIN-LEAD ON SOLDER TAIL END.
5. UL AND CSA LOGO LOCATED ON THIS SURFACE.
6. FOR USE WITH .120 THICK P.C. BOARD.
7. FOR USE WITH .093 THICK P.C. BOARD.
8. CONTACT IS PLATED OVERALL WITH.000050 NICKEL, THEN .000030 GOLD OVER CONTACT LENGTH INDICATED AND .000150 MATTE TIN ON SOLDER TAIL END.
9. OBSOLETE PARTS: OBSOLETE CIS STREAMLINING PER D.RENAUD/D.SINISI

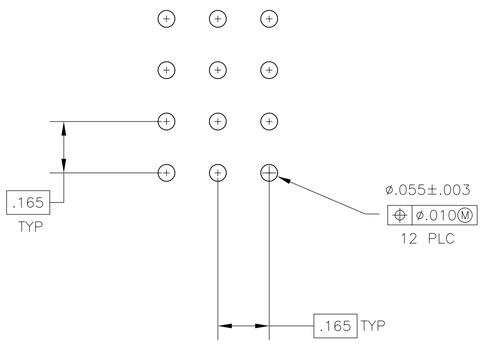

RECOMMENDED P.C. BOARD LAYOUT

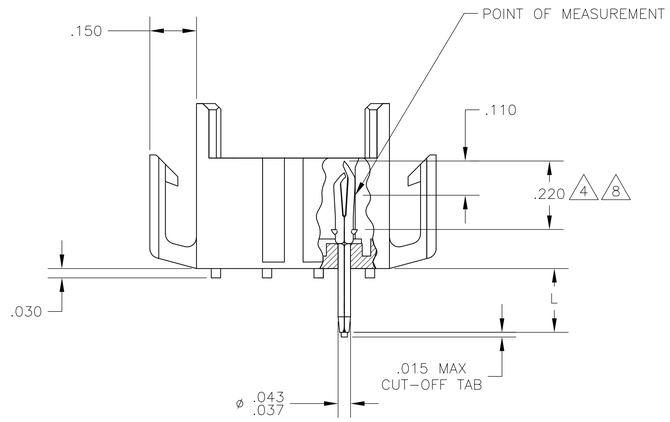

	"L" +.010 -.020	HOUSING COLOR	PIN FINISH	PART NUMBER
9 OBSOLETE	.180 7	BRICK RED	GOLD 8	~~2-640502-6~~
	.210 6	BRICK RED	GOLD 8	2-640502-4
	.150 3	BRICK RED	GOLD 8	2-640502-2
OBSOLETE	.180 7	BRICK RED	GOLD 4	640502-6
	.210 6	BRICK RED	GOLD 4	640502-4
	.210 6	BRICK RED	PRE-TIN	640502-3
	.150 3	BRICK RED	GOLD 4	640502-2
	.150 3	BRICK RED	PRE-TIN	640502-1

.010	0.25	.055	1.40	.210	5.33	-	-
.008	0.20	.043	1.09	.180	4.57	-	-
.005	0.13	.037	0.94	.165	4.19	.785	19.94
.003	0.08	.030	0.76	.150	3.81	.620	15.75
.000050	0.00127	.020	0.51	.110	2.79	.530	13.46
.000030	0.00076	.015	0.38	.063	1.60	.220	5.59
IN	MM	IN	MM	IN	MM	IN	MM

CONVERSION TABLE

METRIC

THIS DRAWING IS A CONTROLLED DOCUMENT.

DIMENSIONS: INCHES

TOLERANCES UNLESS OTHERWISE SPECIFIED:
0 PLC ± -
1 PLC ± -
2 PLC ± -
3 PLC ± .005
4 PLC ± -
ANGLES ± 0° 30'

MATERIAL: HOUSING FLAME RETARDANT NYLON, UL 94V-0. PIN, .008 PH BRZ.

FINISH: SEE FINISH

DWN J. HUFFMAN 28 APR 98
CHK R. SWING 28 APR 98
APVD T. BEDDICK 28 APR 98
PRODUCT SPEC -
APPLICATION SPEC -
WEIGHT -

Tyco Electronics
Tyco Electronics Corporation
Harrisburg, PA 17105-3608

NAME: HEADER ASSEMBLY, PIN, 12 POSITION MR.

SIZE	CAGE CODE	DRAWING NO	RESTRICTED TO
A1	00779	C-640502	-

CUSTOMER DRAWING | SCALE 4:1 | SHEET 1 OF 1 | REV S1

AMP 4805 REV 31MAR2000