THIS DRAWING IS UNPUBLISHED. RELEASED FOR PUBLICATION -,- .
© COPYRIGHT - BY TYCO ELECTRONICS CORPORATION. ALL RIGHTS RESERVED.

LOC	DIST
G	02

REVISIONS

P	LTR	DESCRIPTION	DATE	DWN	APVD
	F3	REV PER ECR 07-004000	21FEB07	JR	TM

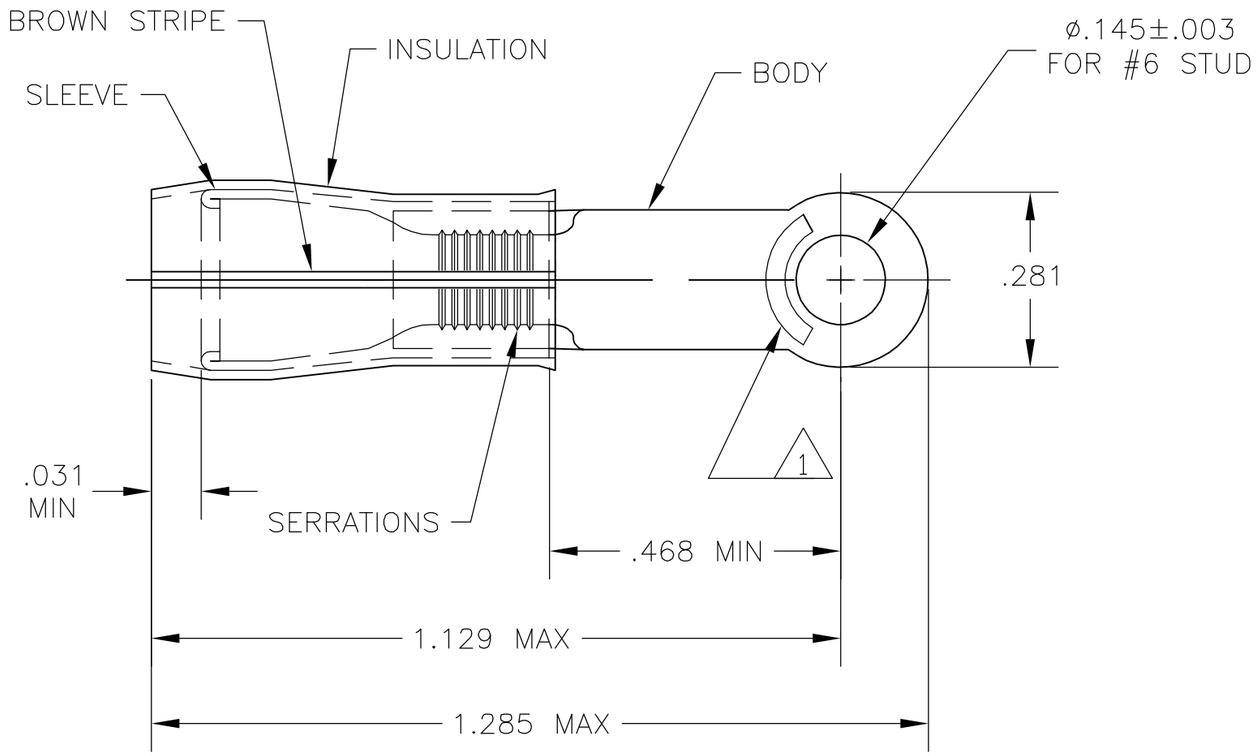

1. STAMP "AMP 12-10"
LOCATED APPROX AS SHOWN

2. MATERIAL:
BODY & SLEEVE: COPPER ASTM B152
INSULATION: NYLON

3. FINISH:
BODY - TIN PLATE PER ASTM B545
SLEEVE - NICKEL PL. PER QQ-N-290
INSULATION: COLOR - YELLOW

4. WIRE INSULATION DIA .119-.200

5. SUPERSEDED BY 152681-1

QTY	PACKAGING	PART NO
500	LOOSE PIECE	152681-1
500	LOOSE PIECE	5 152681

THIS DRAWING IS A CONTROLLED DOCUMENT.

DIMENSIONS: INCHES

TOLERANCES UNLESS OTHERWISE SPECIFIED:

0 PLC	± -
1 PLC	± -
2 PLC	± -
3 PLC	± .005
4 PLC	± -
ANGLES	± 1°

MATERIAL - 2

FINISH - 3

DWN	jr ruth	25OCT05
CHK	T MICHIELUTTI	25OCT05
APVD	T MICHIELUTTI	25OCT05
PRODUCT SPEC	—	
APPLICATION SPEC	—	
WEIGHT	—	

CUSTOMER DRAWING

tyco Electronics
Tyco Electronics Corporation
Harrisburg, PA 17105-3608

NAME
TERMINAL, RING TONGUE, INSULATION RESTRICTING, PIDG, WIRE SIZE 10
—

SIZE	CAGE CODE	DRAWING NO	RESTRICTED TO
A3	00779	C-152681	—

SCALE	SHEET	REV
1:1	1 OF 1	F3