THIS DRAWING IS UNPUBLISHED.
VERTRAULICHE UNVEROEFFENTLICHTE ZEICHNUNG

RELEASED FOR PUBLICATION ,1998
FREI FUER VEROEFFENTLICHUNG

© COPYRIGHT 1998 BY TE INCORPORATED. ALL RIGHTS RESERVED.
ALLE RECHTE VORBEHALTEN

MATED WITH:
PASSEND ZU:
–

LOC	DIST
A1	–

PROJEKT NR.:
–

REVISIONS
AENDERUNGEN

P	LTR	DESCRIPTION BESCHREIBUNG	DATE	DWN	APVD
	A2	ECR-10-004359	09.03.10	GW	ST
	A3	ECR-10-014931	08.08.10	RK	GL

NOTES:

1. ELECTRICAL DATA: CONTACT RESISTANCE: 10 mOhm MAX
   INSULATION RESISTANCE: 100 MOhm MIN at 500VDC
   CURRENT RATING: 5 AMPS
   BREAKDOWN VOLTAGE: 500 VAC MIN PER MINUTE
2. ENVIRONMENTAL: OPERATING TEMPERATURE CONNECTOR: −25°C TO +90°C
   OPERATING TEMPERATURE CABLE: −40°C TO +150°C
   SEALING REQUIREMENTS: IP67
3. PROD SPEC: 108−3641
4. PACKAGING: 107−3334
5. FOR TECHNICAL DATA REFER TO YOUR LOCAL TYCO ELECTRONICS SALES OFFICE
6. ALL DIMENSIONS ARE NOMINAL FOR REFERENCE ONLY UNLESS OTHERWISE STATED

ITEM	DESCRIPTION	MATERIAL	FINISH/COLOUR	QTY
1	SCREW NUT	ZINC DIE CAST	2.5µm NICKEL PLATED	1
2	CONNECTOR BODY	POLYURETHANE	RED	1
3	PIN CONTACT	BRASS	0.15µm GOLD PLATED OVER NICKEL	4
4	4 CORE CABLE (20AWG)	XLPE JACKET HAL FREE	RED	1
5	'O' RING	VITON	GREEN	1

PIN ASSIGNMENTS
FRONT VIEW

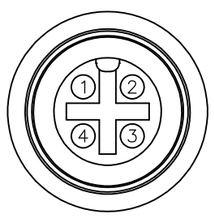

PIN	WIRE COLOUR
4	BLACK
3	BLUE
2	WHITE
1	BROWN

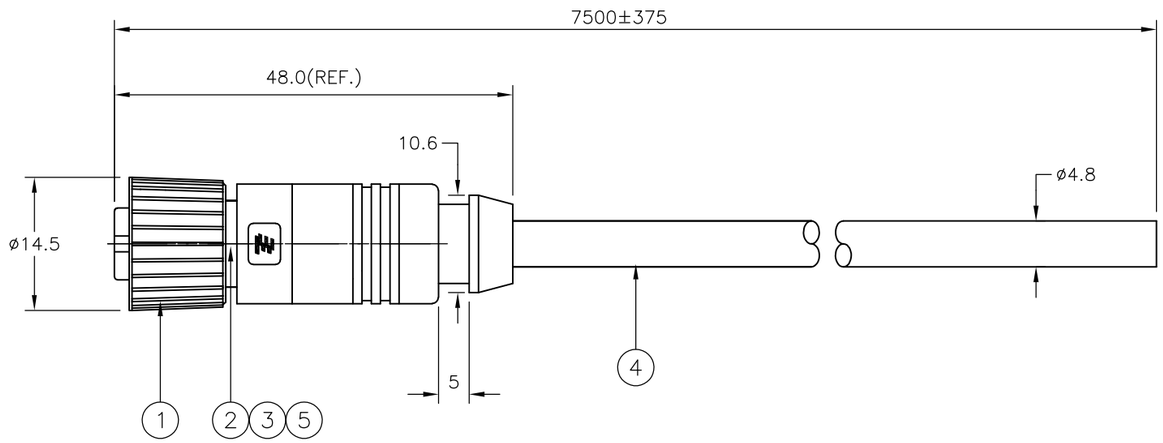

M12 STRAIGHT MALE CONNECTOR 7.5m CABLE	1991115−1
DESCRIPTION	PART NUMBER

THIS DRAWING IS A CONTROLLED DOCUMENT FOR TE INCORPORATED.
IT IS SUBJECT TO CHANGE AND THE CONTROLLING ENGINEERING ORGANIZATION SHOULD BE CONTACTED FOR THE LATEST REVISION.
DIESES ZEICHNUNGSDOKUMENT WIRD DURCH TE INCORPORATED KONTROLLIERT.
AENDERUNGEN, DIE DEM TECHNISCHEN FORTSCHRITT DIENEN, SIND VORBEHALTEN.
DEN JEWEILS LETZTGUELTIGEN AENDERUNGSSTAND ERFAHREN SIE AUF ANFRAGE.

DIMENSIONS:
DIMENSIONEN:
mm

TOLERANCES UNLESS OTHERWISE SPECIFIED:
0 PLC #
1 PLC #
2 PLC #
3 PLC #
ANGLES /WINKEL #

MATERIAL

FINISH /OBERFLAECHE/FARBE

DWN	G.WROBLEWSKI	16.05.08
CHK	T.SCHNURPFEIL	16.05.08
APVD	T.SCHNURPFEIL	16.05.08
PRODUCT SPEC PRODUKTSPEZ.	–	
APPLICATION SPEC VERARBEITUNGSSPEZ.	–	
WEIGHT GEWICHT	–	

Tyco Electronics

Tyco Electronics AMP GmbH
D-53757, Sankt-Augustin, Germany

NAME
M12-STRAIGHT-FEMALE-CONNECTOR
4-POSITION,A-CODE,XL-PE-CABLE

SIZE	CAGE CODE	DRAWING NO ZEICHNUNGS-NR.	RESTRICTED TO NUR FUER
A3	00779	C- 1991115	–

CUSTOMER DRAWING /KUNDENZEICHNUNG

SCALE MASSSTAB	SHEET BLATT	OF VON	REV.
NS	1	1	A3