Customer Information Sheet

DRAWING No.: M80-512XXXX	SHEET 2 OF 2	IF IN DOUBT - ASK	©	NOT TO SCALE	THIRD ANGLE PROJECTION	ALL DIMENSIONS IN mm

SPECIFICATIONS:
- MATERIAL:
  - MOULDING = GLASS-FILLED PPS, UL94V-0, BLACK
  - CONTACT = PHOSPHOR BRONZE
  - JACKSCREW = STAINLESS STEEL
- FINISH (CONTACTS):
  - 05 = 0.75µ GOLD ALL OVER
  - 22 = 0.75µ GOLD ON CONTACT AREA, 3µ 90/10 TIN/LEAD ON TAILS
  - 42 = 0.75µ GOLD ON CONTACT AREA, 3µ 100% TIN OVER NICKEL ON TAILS
- ELECTRICAL:
  - CURRENT RATING AT 25°C = 3.0A MAX
  - CURRENT RATING AT 85°C = 2.2A MAX
  - WORKING VOLTAGE = 800V AC/DC
  - VOLTAGE PROOF = 1200V AC/DC
  - CONTACT RESISTANCE = 25 mΩ MAX
  - INSULATION RESISTANCE = 100 MΩ MIN
- MECHANICAL:
  - DURABILITY = 500 OPERATIONS
- ENVIRONMENTAL:
  - TEMPERATURE RANGE = -55°C TO +125°C
- PACKING:
  - TUBE WITH FIXINGS IN ATTACHED BAG.

FOR COMPLETE SPECIFICATION, SEE COMPONENT SPEC. C005XX (LATEST ISSUE)

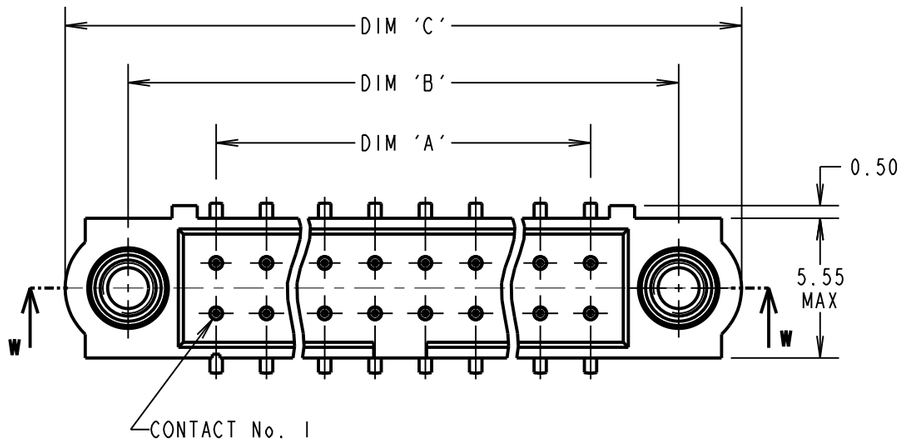

RECOMMENDED PCB LAYOUT

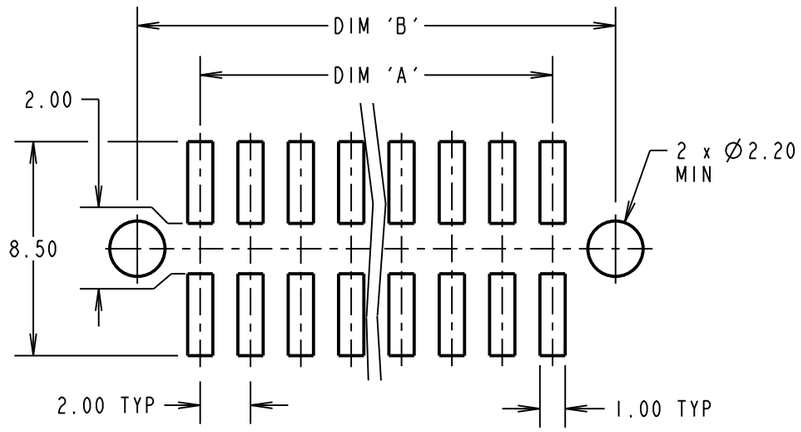

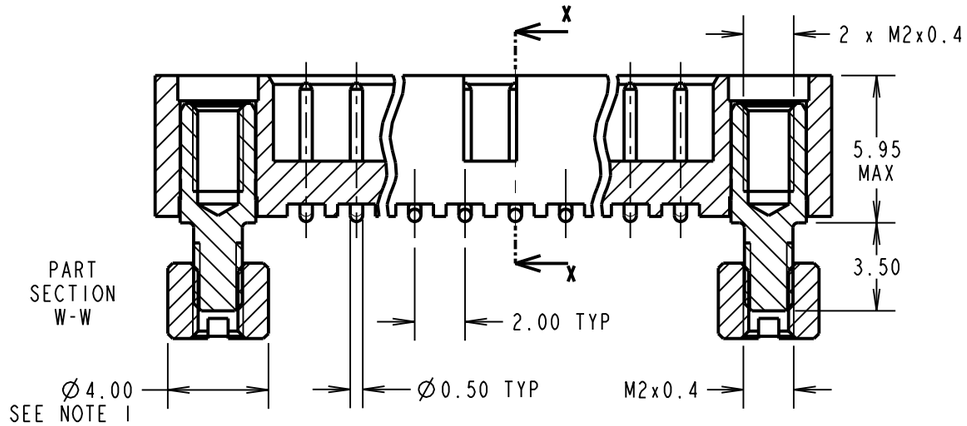

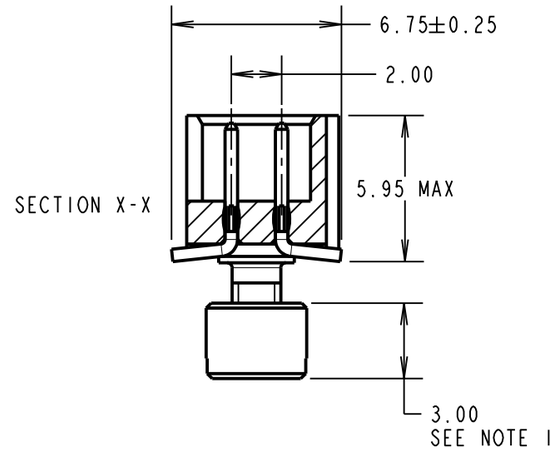

DIMENSION	CALCULATION
DIM 'A'	TOTAL No. OF CONTACTS - 2
DIM 'B'	TOTAL No. OF CONTACTS + 5
DIM 'C'	TOTAL No. OF CONTACTS + 10
EXAMPLE: CONNECTOR WITH 20 CONTACTS, GOLD ON CONTACT AREA AND 100% TIN ON TAIL, M80-5122042. DIM 'A' = 18.00mm, DIM 'B' = 25.00mm, DIM 'C' = 30.00mm	

NOTES:
1. CONNECTOR IS SUPPLIED WITH BOARD MOUNT NUTS NOT ASSEMBLED AS SHOWN. SUPPLIED LOOSE IN BAG ATTACHED TO PACKING TUBE.

ORDER CODE:

M80-512XXXX

TOTAL No. OF CONTACTS
04 TO 50
(EVEN NUMBERS ONLY)

FINISH
- 05 - GOLD ALL OVER
- 22 - GOLD ON CONTACT AREA / TIN/LEAD ON TAIL
- 42 - GOLD ON CONTACT AREA / 100% TIN ON TAIL

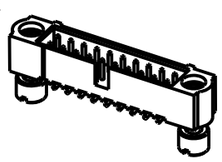

NAME	ISS.	DATE	C/NOTE
MSP	8	04.04.16	13302

APPROVED: M.PERREN
CHECKED: M.PLESTED
DRAWN: W. J. BOURNE
CUSTOMER REF.:
ASSEMBLY DRG:

HARWIN
www.harwin.com
technical@harwin.com

THIS DRAWING AND ANY INFORMATION OR DESCRIPTIVE MATTER SET OUT HEREON ARE CONFIDENTIAL AND COPYRIGHT PROPERTY OF THE HARWIN GROUP AND MUST NOT BE DISCLOSED, LOANED, COPIED OR USED FOR MANUFACTURING, TENDERING OR FOR ANY OTHER PURPOSE WITHOUT THEIR WRITTEN PERMISSION.

TOLERANCES
X. = ±1mm
X.X = ±0.50mm
X.XX = ±0.10mm
X.XXX = ±0.01mm
ANGLES = ±5°
UNLESS STATED

MATERIAL: SEE ABOVE
FINISH: SEE ABOVE
S/AREA: mm²

TITLE: DATAMATE J-TEK MALE VERTICAL SMT ASSY WITH 3.5mm BOARD MOUNT

DRAWING NUMBER: M80-512XXXX

SHT 2 OF 2