CATALOGUE NUMBER
7434L0422F01
7434L0423F01
7434L0425F01

Clips de fixation pour circuit ép:1.6mm
Ø de percage=3.2 ⌖ Ø 0.05

Crimping part to use with a thickness PCB of 1.6 holes Ø=3.2

Ø3 0 -0.10 ⌖ Ø 0.05

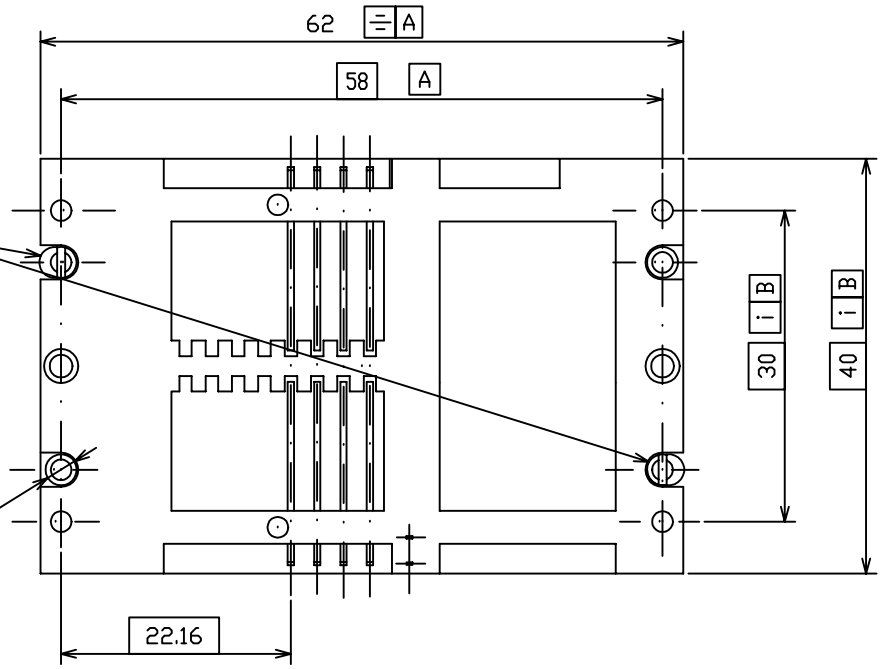

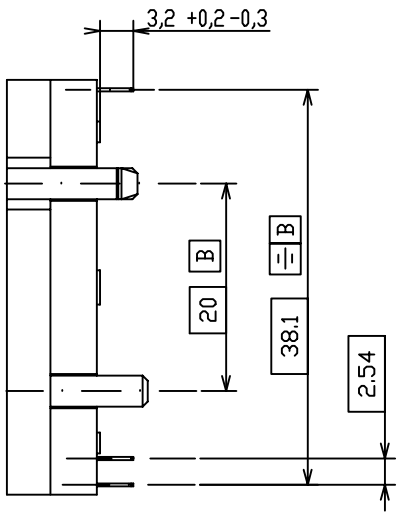

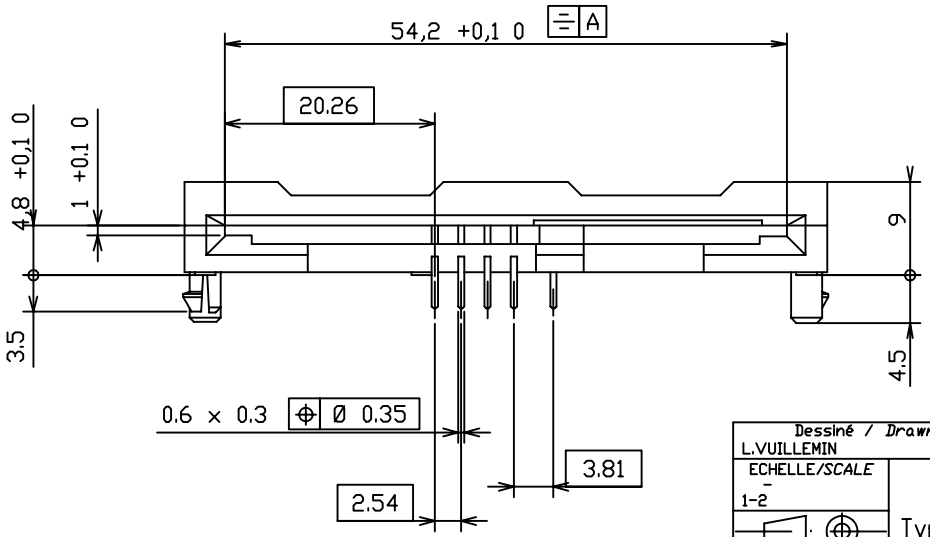

IMPLANTATION C.I
PCB FOOTPRINT

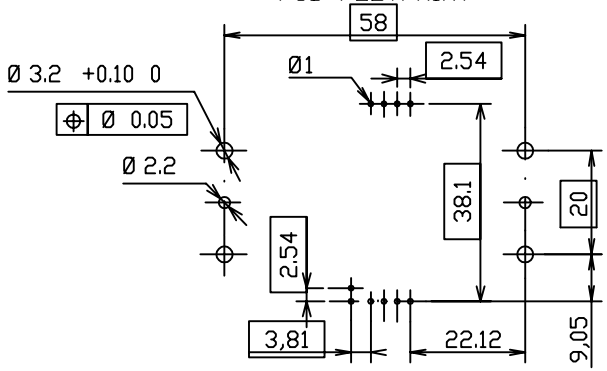

Tol.Gén: 0mm a 10mm ±0.1mm
10 a 30mm ±0.15mm
30 a 60mm ±0.2mm
60mm et plus ±0.3mm

Dessiné / *Drawn*	Vérifié / *Checked*	Approuvé / *Approved*
L.VUILLEMIN	D.PERRIN	E.DDIC

ECHELLE/*SCALE* - 1-2

Dossier/ *File:* VXX 27528

CONNECTEUR DE CARTE

Type:L04

FCI ELECTRONICS

FRAMATOME CONNECTORS PONTARLIER
Rue Claude CHAPPE BP19
25301 PONTARLIER CEDEx - FRANCE

COMMUNICATION,REPRODUCTION,UTILISATION INTERDITES SAUF AUTORISATION ECRITE.
NO PART OF THIS DOCUMENT MAY BE COMMUNICATED, REPRODUCED OR USED WITHOUT PRIOR WRITTEN PERMISSION.

PAGE/*PAGE*

VJW 12031

EDITION/*ISSUE*

06	21-12-99
05	11-12-97
04	26-02-97
03	08-04-94
02	07-06-91
01	28-08-90