THIS DRAWING IS UNPUBLISHED. RELEASED FOR PUBLICATION -,- .
© COPYRIGHT - By - ALL RIGHTS RESERVED.

REVISIONS

P	LTR	DESCRIPTION	DATE	DWN	APVD
	H1	REVISED PER ECO-11-004917	11MAR11	RK	HMR
	H2	REVISED PER ECO-17-007400	28NOV2017	RS	DR

AMP WIRE RANGE	Listed	LR7189 Certified
12-10 AWG SOLID OR STRANDED	12-10 AWG SOLID OR STRANDED	12-10 AWG SOLID OR STRANDED

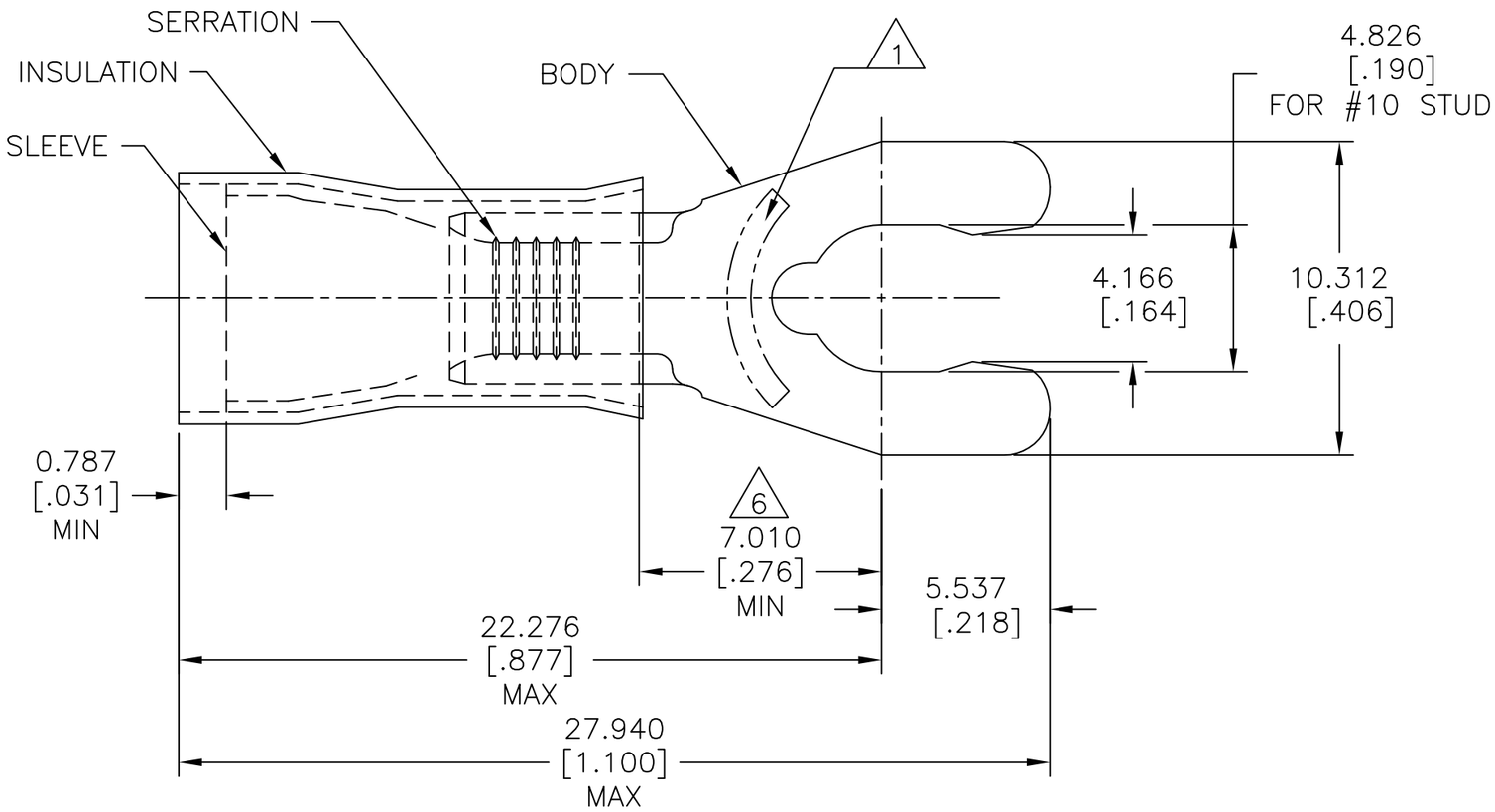

1 STAMP 10S AMP 12-10* APPROX AS SHOWN

2 WIRE INSULATION ø3.810-6.350[ø.150-.250]

3 BODY MATERIAL THICKNESS 0.991±0.051[.039±.002]

4 MATERIAL: BODY - PHOS BRONZE PER ASTM B103
INSULATION - NYLON,
METAL SLEEVE - COPPER PER ASTM B152.

5 FINISH: BODY - TIN PLATE PER ASTM B545
METAL SLEEVE - TIN PLATE PER ASTM B545
INSULATION - COLOR- YELLOW.

6 APPLIES FROM EDGE OF METAL WIRE BARREL TO CENTER OF STUD.

QTY	PACKAGE TYPE	PART NO
2500	ON TAPE	52943-1
500	LOOSE PIECE	52943

AMP INCORPORATED
CUSTOMER SERVICE SYSTEMS

FOR ADDITIONAL PRODUCT INFORMATION OR COPIES OF DRAWINGS AND TECHNICAL DOCUMENTS	PRODUCT INFORMATION CENTER 1-800-522-6752
FOR APPLICATION TOOLING INFORMATION	TOOLING ASSISTANCE CENTER 1-800-722-1111
FOR ORDER ENTRY	1-800-526-5142

THIS DRAWING IS A CONTROLLED DOCUMENT FOR AMP INCORPORATED. IT IS SUBJECT TO CHANGE AND THE CONTROLLING ENGINEERING ORGANIZATION SHOULD BE CONTACTED FOR THE LATEST REVISION.

MAX RECOMMENDED OPERATING TEMPERATURE: 105°C [221°F]

VOLTAGE RATING: 300 V MAX

CIRCULAR MIL AREA: 2.62-6.64mm² [5,180-13,100] SOLID OR STRANDED

THIS DRAWING IS A CONTROLLED DOCUMENT.

DIMENSIONS: mm [INCHES]

TOLERANCES UNLESS OTHERWISE SPECIFIED:
0 PLC ± -
1 PLC ± -
2 PLC ± -
3 PLC ± 0.127[.005]
4 PLC ± -
ANGLES ± 5°

MATERIAL 4

FINISH 5

DWN jr ruth	20MAR07	
CHK T MICHIELUTTI	20MAR07	
APVD T MICHIELUTTI	20MAR07	
PRODUCT SPEC UL 486 A-B		
APPLICATION SPEC 114-2157		
WEIGHT -		

TE Connectivity

NAME: TERMINAL, SPRING SPADE, STUB, PIDG
WIRE SIZE: 12-10

SIZE	CAGE CODE	DRAWING NO	RESTRICTED TO
A3	00779	C-52943	-

CUSTOMER DRAWING | SCALE 5:1 | SHEET 1 OF 1 | REV H2

1470-19 (1/15)