THIS DRAWING IS UNPUBLISHED. RELEASED FOR PUBLICATION -,- .
© COPYRIGHT - BY TYCO ELECTRONICS CORPORATION. ALL RIGHTS RESERVED.

| LOC | DIST |
|---|---|
| FT | 64 |

REVISIONS

| P | LTR | DESCRIPTION | DATE | DWN | APVD |
|---|---|---|---|---|---|
| | E | REV PER OG3C-0162-99 | 17NOV00 | RB | HW |
| | E1 | REVISED PER ECO-09-021510 | 05SEP09 | KK | AEG |
| | F | ECR-13-018647 | 14MAR14 | W.W | C.W |

1. RECEPTACLE ACCEPTS A 0.20-0.36 [.008-.014] THICK I.C. LEAD.
2. TUBE LOADED FOR AUTOMATIC INSERTION.
3. LUBRICANT: MONSANTO OS-138.
4. HOUSING: GLASS-FILLED, THERMOPLASTIC, 94V-0, BLACK.
   CONTACT: PH BRONZE.
5. CONTACT: TINNED.
6. OBSOLETE PARTS: OBSOLETE CIS STREAMLINING PER D.RENAUD/D.SINISI

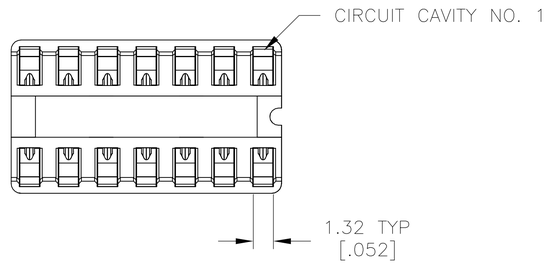


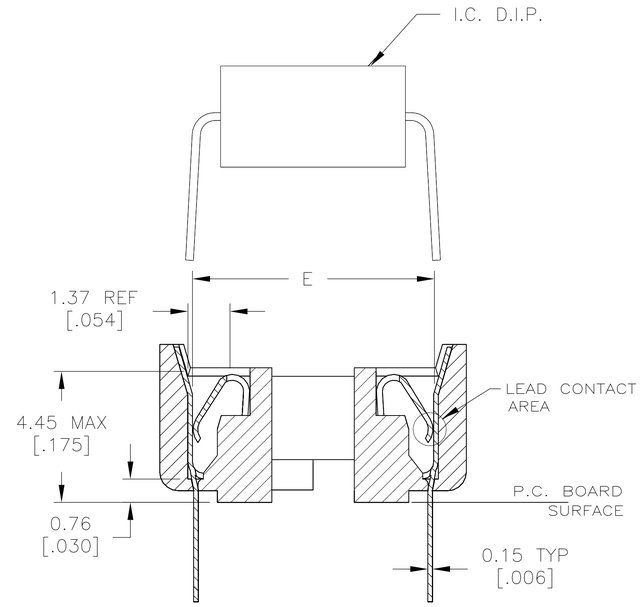


SECTION A-A
SCALE 10:1

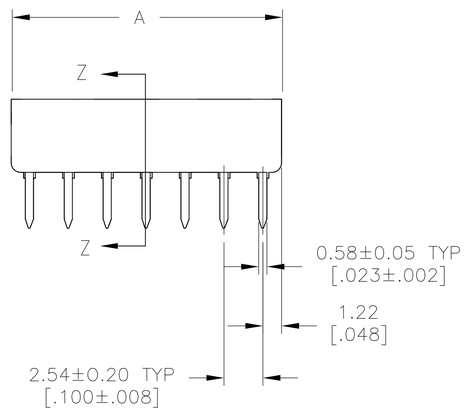


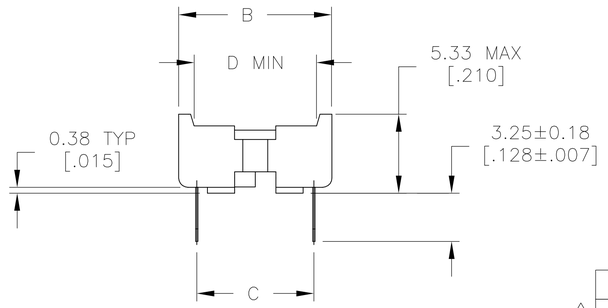


| | | E | D | C ±0.20 [±.008] | B | A | POSN | PART NUMBER |
|---|---|---|---|---|---|---|---|---|
| | OBSOLETE | ~~23.11 [.910]~~ | ~~23.39 [.921]~~ | ~~22.86 [.900]~~ | ~~26.01 [1.024]~~ | ~~81.66 [3.215]~~ | ~~64~~ | ~~6-382568-4~~ |
| 6 | OBSOLETE | ~~15.49 [.610]~~ | ~~15.77 [.621]~~ | ~~15.24 [.600]~~ | ~~17.63 [.694]~~ | ~~60.83 [2.395]~~ | ~~48~~ | ~~4-382568-8~~ |
| | | 15.49 [.610] | 15.77 [.621] | 15.24 [.600] | 17.63 [.694] | 50.67 [1.995] | 40 | 4-382568-0 |
| F | OBSOLETE | ~~15.49 [.610]~~ | ~~15.77 [.621]~~ | ~~15.24 [.600]~~ | ~~17.63 [.694]~~ | ~~40.51 [1.595]~~ | ~~32~~ | ~~3-382568-2~~ |
| | | 15.49 [.610] | 15.77 [.621] | 15.24 [.600] | 17.63 [.694] | 35.43 [1.395] | 28 | 2-382568-8 |
| | | 15.49 [.610] | 15.77 [.621] | 15.24 [.600] | 17.63 [.694] | 30.35 [1.195] | 24 | 2-382568-5 |
| F | OBSOLETE | ~~7.87 [.310]~~ | ~~8.15 [.321]~~ | ~~7.62 [.300]~~ | ~~10.01 [.394]~~ | ~~30.35 [1.195]~~ | ~~24~~ | ~~2-382568-4~~ |
| | OBSOLETE | ~~10.41 [.410]~~ | ~~10.69 [.421]~~ | ~~10.16 [.400]~~ | ~~12.55 [.494]~~ | ~~27.81 [1.095]~~ | ~~22~~ | ~~2-382568-2~~ |
| F | OBSOLETE | ~~7.87 [.310]~~ | ~~8.15 [.321]~~ | ~~7.62 [.300]~~ | ~~10.01 [.394]~~ | ~~25.27 [.995]~~ | ~~20~~ | ~~2-382568-0~~ |
| | OBSOLETE | ~~7.87 [.310]~~ | ~~8.15 [.321]~~ | ~~7.62 [.300]~~ | ~~10.01 [.394]~~ | ~~22.73 [.895]~~ | ~~18~~ | ~~1-382568-8~~ |
| | | 7.87 [.310] | 8.15 [.321] | 7.62 [.300] | 10.01 [.394] | 20.19 [.795] | 16 | 1-382568-6 |
| | OBSOLETE | ~~7.87 [.310]~~ | ~~8.15 [.321]~~ | ~~7.62 [.300]~~ | ~~10.01 [.394]~~ | ~~17.65 [.695]~~ | ~~14~~ | ~~1-382568-4~~ |
| | OBSOLETE | ~~7.87 [.310]~~ | ~~8.15 [.321]~~ | ~~7.62 [.300]~~ | ~~10.01 [.394]~~ | ~~10.03 [.395]~~ | ~~8~~ | ~~382568-8~~ |
| | OBSOLETE | ~~7.87 [.310]~~ | ~~8.15 [.321]~~ | ~~7.62 [.300]~~ | ~~10.01 [.394]~~ | ~~7.49 [.295]~~ | ~~6~~ | ~~382568-6~~ |

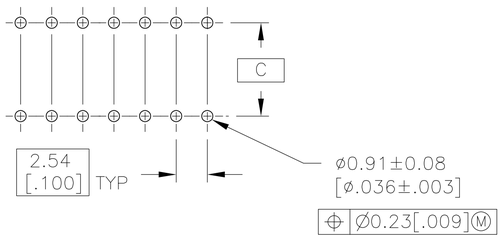


RECOMMENDED MOUNTING HOLE PATTERN
SCALE 4:1

THIS DRAWING IS A CONTROLLED DOCUMENT.

DIMENSIONS: INCHES

TOLERANCES UNLESS OTHERWISE SPECIFIED:
0 PLC ± -
1 PLC ± -
2 PLC ± 0.13 [.005]
3 PLC ± -
4 PLC ± -
ANGLES ± -

MATERIAL: SEE NOTE 4
FINISH: SEE NOTE 5

DWN R BROWN 17NOV00
CHK H WYNKOOP 17NOV00
APVD H WYNKOOP 17NOV00
PRODUCT SPEC 108-1066
APPLICATION SPEC 114-1049
WEIGHT -

Tyco Electronics — Tyco Electronics Corporation, Harrisburg, PA 17105

NAME: SOCKET ASSY, DIP, SPCL LUBE, DIPLOMATE™ DL -

SIZE A1 | CAGE CODE 00779 | DRAWING NO C-382568 | RESTRICTED TO -

CUSTOMER DRAWING | SCALE 5:1 | SHEET 1 OF 1 | REV F