MATERIALS AND FINISHES

BODY, CRIMP TUBE, CAP,
SLEEVE, COUPLING NUT: BRASS
PLATED NICKEL

CENTER CONTACT BRASS
PLATED GOLD

INSULATOR TEFLON

GASKET SILICONE RUBBER

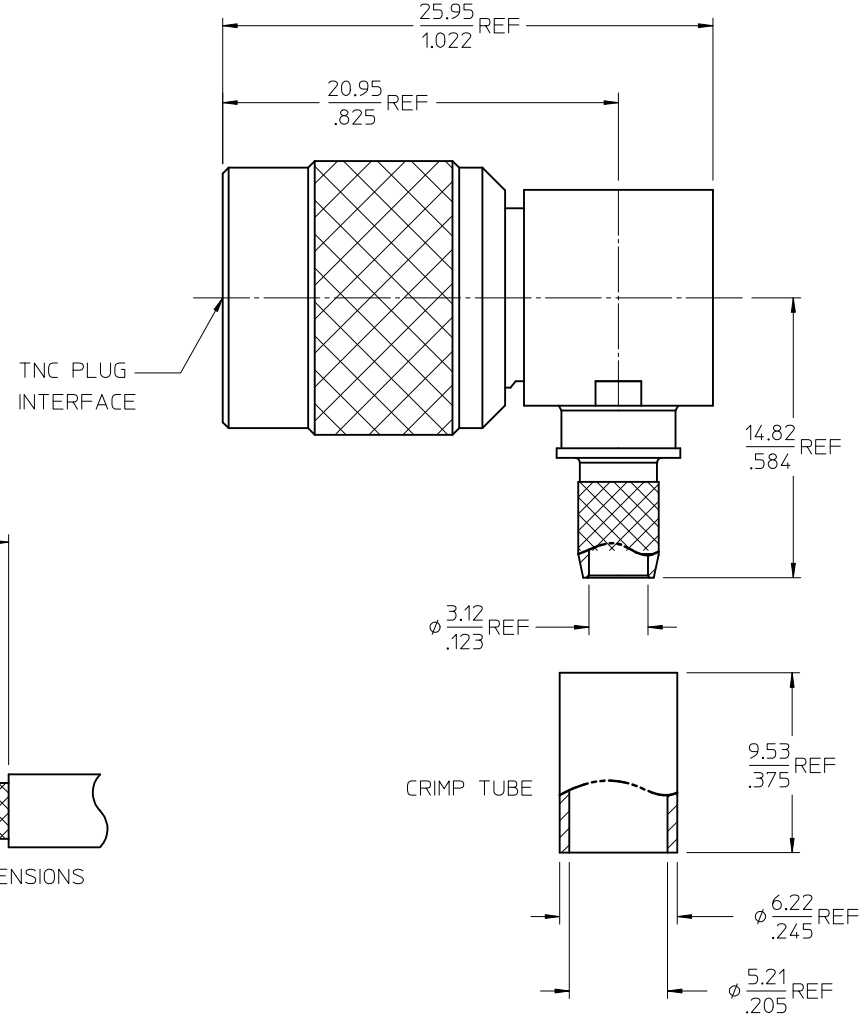

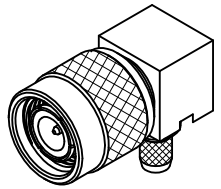

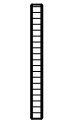

CAP

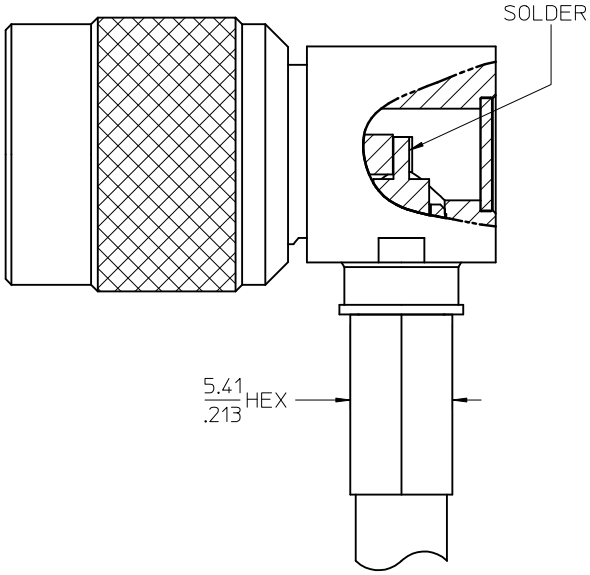

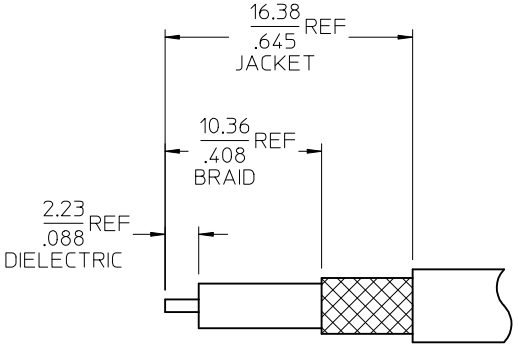

CABLE STRIP DIMENSIONS

NOTE: 73216-0050 IS SAME AS 73216-1510

PART NO.	PACKAGING
73216-0051	ONE PER BAG
73216-0050	STANDARD

SPECIFICATION	DESCRIPTION
PS-89675-1400	ELECTRICAL/MECHANICAL

CHG: ADD -0051
PS WAS
ES-73599-0000-003
EC NO: URF2011-0614 2011/04/19
DRWN: JWIENER 2011/04/19
CH'KD: SSS 2011/04/20
APPR: JWIENER
DESCRIPTION
A3
REV

QUALITY SYMBOLS
▼=0
▽=0

GENERAL TOLERANCES (UNLESS SPECIFIED)

	mm	INCH
4 PLACES	± ---	± ---
3 PLACES	± ---	± ---
2 PLACES	± ---	± ---
1 PLACE	± ---	± ---
ANGULAR ± 2 °		

DRAFT WHERE APPLICABLE MUST REMAIN WITHIN DIMENSIONS

DIMENSION STYLE: MM/IN
SCALE
DESIGN UNITS: METRIC
THIRD ANGLE PROJECTION

		DATE
DRAWN BY	AZR	2008/10/15
CHECKED BY	SSS	2008/10/15
APPROVED BY	JDW	2008/10/15

TITLE: TNC PLUG, R/A, 50 OHM FOR RG58, 141, 303 EWR-2717, TNC-PC

molex MOLEX INCORPORATED

MATERIAL NO.: SEE TABLE
DOCUMENT NO.: SD-73216-005
SHEET NO.: 1 OF 1
SIZE: C

THIS DRAWING CONTAINS INFORMATION THAT IS PROPRIETARY TO MOLEX INCORPORATED AND SHOULD NOT BE USED WITHOUT WRITTEN PERMISSION