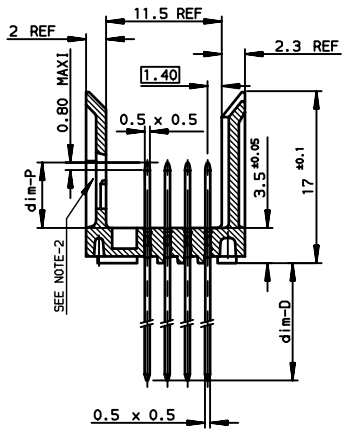


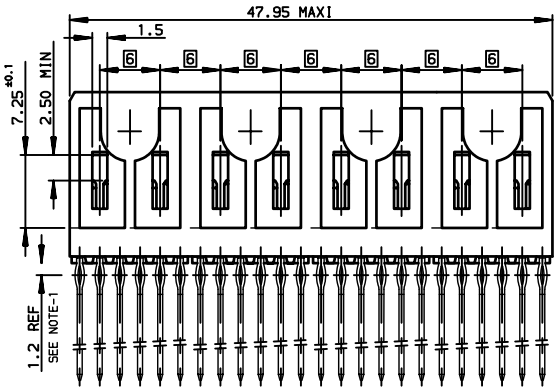


LAYOUT FOR P.C.B
(PER 12mm LENGTH)

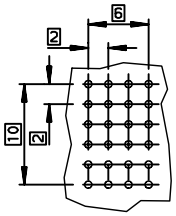


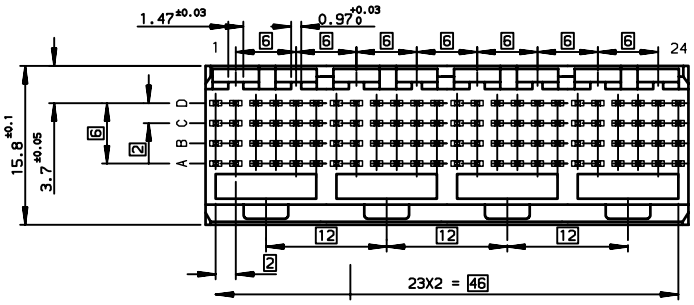


TIN LEAD PART NUMBER

| Part number: HM1W43xyR000H6 | | | | | | | |
|---|---|---|---|---|---|---|---|
| Replace x by ( dim-P ±0.10 ) | | | | | | Replace y by | |
| | ROW-A | ROW-B | ROW-C | ROW-D | | | |
| A = | 5.00 | 5.00 | 5.00 | 5.00 | | P if dim-D = 4.25±0.25 | |
| B = | 6.50 | 5.00 | 5.00 | 5.00 | | K if dim-D = 11.8±0.25 | |
| C = | 6.50 | 5.75 | 5.75 | 6.50 | | V if dim-D = 13.6±0.25 | |
| D = | 6.50 | 6.50 | 6.50 | 6.50 | | L if dim-D = 15.6±0.25 | |
| E = | 5.75 | 7.25 | 5.75 | 5.75 | | N if dim-D = 17.0±0.25 | |
| H = | 8.00 | 8.00 | 7.25 | 6.50 | | | |
| K = | 6.50 | 8.00 | 6.50 | 6.50 | | | |
| L = | 5.75 | 5.75 | 5.75 | 5.75 | | | |
| M = | 7.25 | 7.25 | 7.25 | 7.25 | | | |
| N = | 8.00 | 8.00 | 8.00 | 8.00 | | | |

LEAD FREE PART NUMBER

| Part number: HM1W43xyR000H6LF | | | | | | | |
|---|---|---|---|---|---|---|---|
| Replace x by ( dim-P ±0.10 ) | | | | | | Replace y by | |
| | ROW-A | ROW-B | ROW-C | ROW-D | | | |
| A = | 5.00 | 5.00 | 5.00 | 5.00 | | P if dim-D = 4.25±0.25 | |
| B = | 6.50 | 5.00 | 5.00 | 5.00 | | K if dim-D = 11.8±0.25 | |
| C = | 6.50 | 5.75 | 5.75 | 6.50 | | V if dim-D = 13.6±0.25 | |
| D = | 6.50 | 6.50 | 6.50 | 6.50 | | L if dim-D = 15.6±0.25 | |
| E = | 5.75 | 7.25 | 5.75 | 5.75 | | N if dim-D = 17.0±0.25 | |
| H = | 8.00 | 8.00 | 7.25 | 6.50 | | | |
| K = | 6.50 | 8.00 | 6.50 | 6.50 | | | |
| L = | 5.75 | 5.75 | 5.75 | 5.75 | | | |
| M = | 7.25 | 7.25 | 7.25 | 7.25 | | | |
| N = | 8.00 | 8.00 | 8.00 | 8.00 | | | |

GENERAL CHARACTERISTICS AND ROHS INFORMATIONS:
SEE PRODUCT SPECIFICATION GS-12-445

(REDUCED SCALE SHEET)

NOTE-1: "EYE OF THE NEEDLE"PRESS-FIT PIN TYPE
NOTE-2: CAVITY FOR CODING KEY MOUNTING AND CABLE CONNECTOR LATCH.
NOTE-3: INSERTION TOOLING ON PCB,SEE DRAWING REF C-8626-1001
NOTE-4: IF SUFFIX "P" IS ADDED IN P/N, PACKAGING IS IN TRAYS
BUT CONNECTOR MARKING IS WITHOUT "P"
EXAMPLE:HM1W43xyR000H6P MARKED HM1W43xyR000H6
NOTE-5: P.C.B HOLES DEFINITION - SEE GS-12-445

| rev | ecn no | dr | date |
|---|---|---|---|
| G | - | PER | 2001/04/18 |
| H | LS05-004 | MLE | 2005/02/14 |
| J | LS06-0097 | LGO | 2006/07/26 |
| K | LS07-0012 | MLE | 2007/03/23 |
| - | - | - | - |
| - | - | - | - |
| - | - | - | - |

European Views

www.fciconnect.com

surface ISO 1302 ✓ | tolerance std ISO 406 ISO 1101 | projection | mm

TOLERANCES UNLESS OTHERWISE SPECIFIED

| | | | | | | |
|---|---|---|---|---|---|---|
| Dr | CHAMPION | 12/12/35 | ANGULAR | LINEAR | 0.X | ±0.1 |
| Eng | LENOIR | 1991/07/30 | | | 0.XX | ±0.1 |
| Chr | LEGARE | 1991/07/30 | 0.XX° | ±2° | 0.XXX | ±0.1 |
| Appr | LEGARE | 1991/07/30 | Product family | | METRAL | |

size A3 | Scale 2 | ECN LS07-0012 | Spec ref -

title: METRAL STRAIGHT HEADER - 96 WAY
PRESS-FIT/ WIDE BODY

dwg no C-8626-0011 | Rev. K

catalog no - | CUSTOMER | sheet 1 of 1

REV F - 2006-04-17

Copyright FCI.

PDM: Rev:K STATUS:Released Printed: Jan 06, 2010