THIS DRAWING IS UNPUBLISHED. RELEASED FOR PUBLICATION -,- .
© COPYRIGHT - By - ALL RIGHTS RESERVED.

| LOC | DIST |
|---|---|
| GP | 00 |

REVISIONS

| P | LTR | DESCRIPTION | DATE | DWN | APVD |
|---|---|---|---|---|---|
| | D2 | REVISED PER ECR-14-000795 | 30JUL14 | SW | HL |

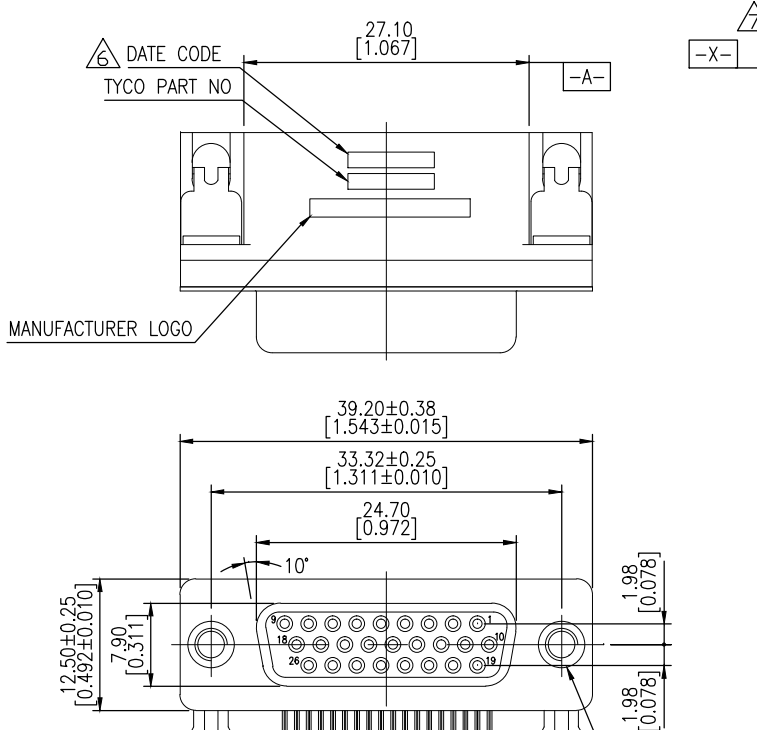


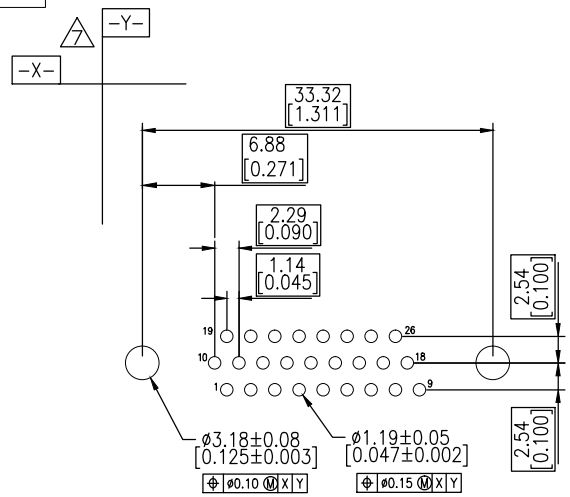


RECOMMENDED PCB LAYOUT

1. HOUSING: PBT, 30% GF POLYESTER, UL 94V-0 RATED, COLOR BLACK.
2. CONTACTS: PHOSPHOR BRONZE, GOLD PLATE IN MATING AREA (SEE TABLE), 120u" MIN TIN PLATE ON SOLDER TAIL, BOTH OVER 50u" MIN NICKEL UNDERPLATE.
3. SHELL: STEEL, NICKEL PLATE.
4. BOARDLOCK: BRASS, TIN PLATE 100u" MIN.
5. FEMALE SCREWLOCK: BRASS, NICKEL PLATE 30u" MIN.
6. FOUR DIGIT DATE CODE IN THIS FORMAT.
   01 45
   YEAR — MANUFACTURING WEEK
7. DATUMS -X- & -Y- TO BE ESTABLISHED BY CUSTOMER.

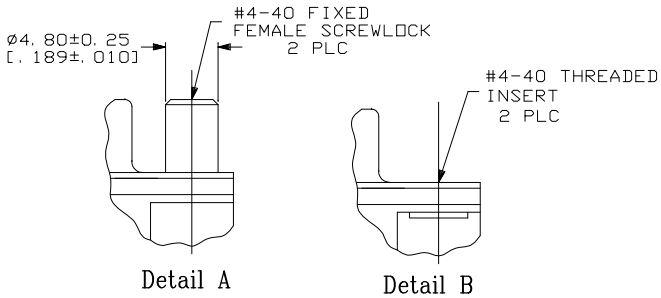


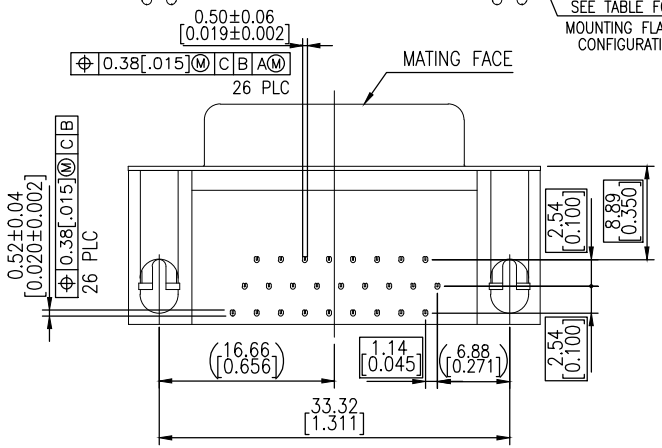


5748481-5, 2--2, & 2--3 SHOWN

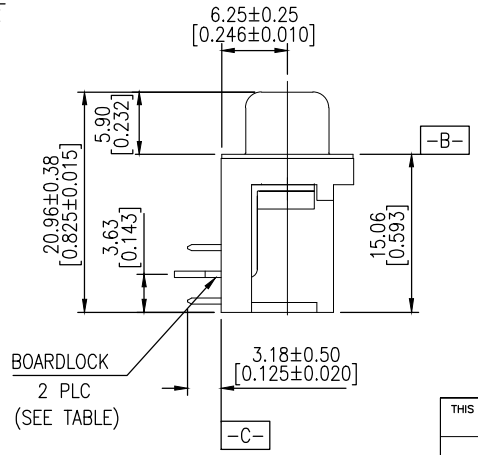


| | | | | | |
|---|---|---|---|---|---|
| OBSOLETE | NO | Tray | Detail B | Gold flash | 2-5748481-7 |
| OBSOLETE | NO | Tray | Detail B | 15μ" MIN GOLD | 2-5748481-6 |
| OBSOLETE | YES | Tray | Detail A | Gold flash | 2-5748481-5 |
| OBSOLETE | YES | Tray | Detail A | 15μ" MIN GOLD | 2-5748481-4 |
| OBSOLETE | YES | Tray | Detail B | Gold flash | 2-5748481-3 |
| OBSOLETE | YES | Tray | Detail B | 15μ" MIN GOLD | 2-5748481-2 |
| OBSOLETE | NO | Tray | Detail B | 30μ" MIN GOLD | 1-5748481-9 |
| | YES | Tray | Detail A | 30μ" MIN GOLD | 5748481-6 |
| | YES | Tray | Detail B | 30μ" MIN GOLD | 5748481-5 |
| | BOARDLOCK | Packaging | Mounting Flange | Contact Mating Area Finish | Part No |

THIS DRAWING IS A CONTROLLED DOCUMENT.

DIMENSIONS: mm [INCHES]

TOLERANCES UNLESS OTHERWISE SPECIFIED:
0 PLC ± -
1 PLC ± 0.30
2 PLC ± 0.20
3 PLC ± 0.10
4 PLC ± -
ANGLES ± 2°

MATERIAL -
FINISH -

DWN R.RICHARDSON 31MAY05
CHK S.BOLASH 31MAY05
APVD M.WALMSLEY 31MAY05
PRODUCT SPEC —
APPLICATION SPEC —
WEIGHT —

TE Connectivity

NAME: AMPLIMITE HD-22 26 POS RECEPTACLE, RIGHT ANGLE —

SIZE A2 | CAGE CODE 00779 | DRAWING NO C-5748481 | RESTRICTED TO —

CUSTOMER DRAWING | SCALE 1:1 | SHEET 1 OF 1 | REV D2

5748481

1471-9 (3/11)