ED600/XDS (10.0 mm)
EDZ600/XDS (10.16 mm)

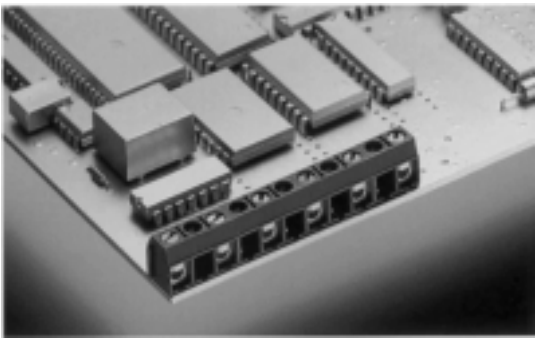

2-12 poles, Spacing 10.0 mm or 10.16 mm
insert required no. of poles **x**
How to order see page 5
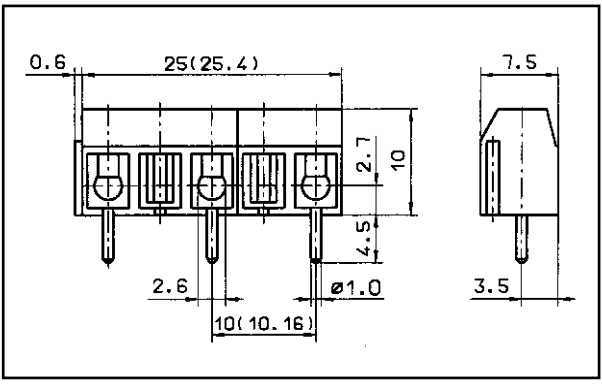
Ratings:		
Rated Voltage	**300V**	**750 V**
Rated Current	**15 A**	**17.5 A (T60)**
Wire Size	**AWG 22-14**	**1.5 mm²**
Test Voltage		**3.5 kV**
Rated Torque/ScrewSize		**0.4 Nm/M2.6**
Max. Rated Cross Section		
Single Wire (solid)		**1.5 mm²**
Stranded Wire (flexible)		**1.5 mm²**
Stranded wire with Ferrules		**0.75 mm²**
Dimensions		
Spacing		**10.0 mm (10.16 mm)**
PCB Hole Diameter		**1.3 mm**
Stripped Length		**6.0 mm**
Materials		
Insulating Material		**PA**
Flammability Class		**UL94 V-0**
Temperature Range		**-30°C/+105°C**
Terminal Block		**CuZn**
Wire Guard		**Stainless Steel**
Color		
Blue