REV.	DATE	DESCRIPTION
A	11/13/03	UPDATE DRAWING FORMAT
B	01/24/05	UPDATE PART DESCRIPTION
C	07/07/05	MODIFY CABLE DESCRIPTION RG-58

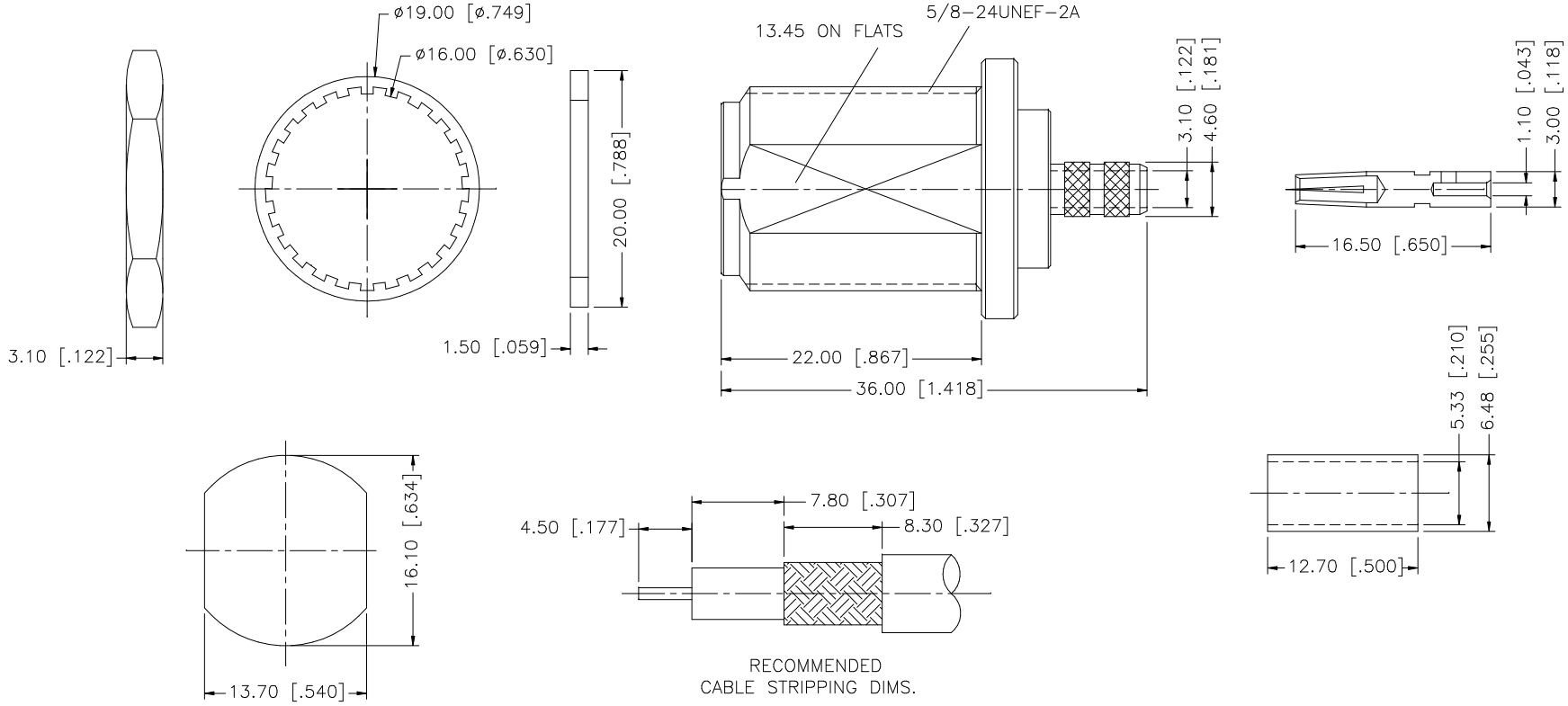

NOTE:

1. CRIMPED FERRULE
   HEX CRIMP SIZE .213"
2. CRIMPED CONTACT PIN
   HEX CRIMP SIZE .100"

	DESCRIPTION	MATERIAL	FINISH	QTY
8				
7	FERRULE	COPPER	NEXCOTE	1
6	GASKET	SILICONE	RED	1
5	HEX NUT	BRASS	NEXCOTE	1
4	LOCK WASHER	BRASS	NEXCOTE	1
3	CONTACT PIN	PHOS. BRONZE	GOLD	1
2	INSULATOR	TEFLON	NATURAL	1
1	BODY	BRASS	NEXCOTE	1

UNLESS OTHERWISE SPECIFIED DIMENSIONS ARE IN MILLIMETERS. DIMENSIONS IN [ ] ARE IN INCHES AND FOR CUSTOMER REFERANCE ONLY.

UNLESS OTHERWISE SPECIFIED TOLERANCES FOR MILLIMETERS ARE:

0.5 – 8mm ± 0.20mm
8 – 30mm ± 0.40mm
30 – 120mm ± 0.50mm

UNLESS OTHERWISE SPECIFIED TOLERANCES FOR INCHES ARE:

.020 – .315 = ± 0.007"
.315 – 1.180 = ± 0.015"
1.180 – 4.724 = ± 0.020"

DO NOT SCALE DRAWING

APPROVALS		DATE
DRAWN	G.R.S.	07/07/05
CHECKED		
ISSUED		
SHEET	1 OF 1	
CAD FILE	C:/172/172106.DWG	

Amphenol Connex

PART DESCRIPTION: N BULKHEAD CRIMP JACK (FOR RG-58 CABLE)

PART NO. 172106

DWG. NO. 172106.DWG | REV. C | SIZE A | SCALE NA