THIS DRAWING IS UNPUBLISHED. RELEASED FOR PUBLICATION
© COPYRIGHT BY TYCO ELECTRONICS CORPORATION. ALL RIGHTS RESERVED.

LOC	DIST
DS	–

REVISIONS

P	LTR	DESCRIPTION	DATE	DWN	APVD
	A	RELEASED	30.JUN'09	SH	JK

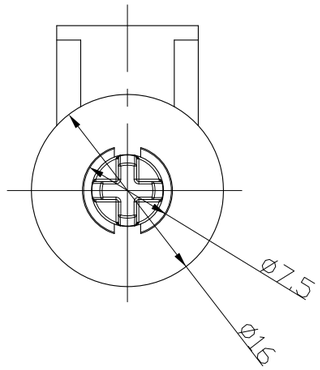

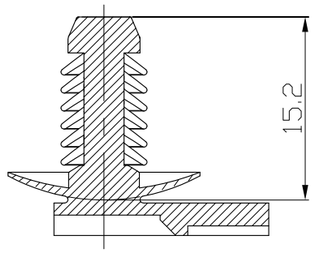

SECTION A-A

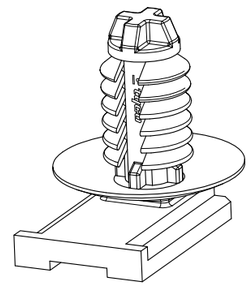

ISOMETRIC VIEW

PANEL HOLE

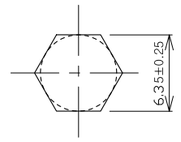

PANEL THICKNESS : 0.7~2.5mm

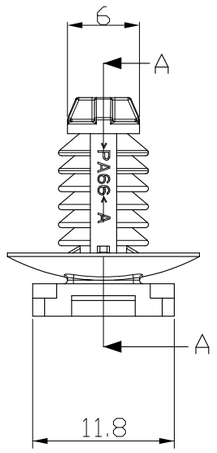

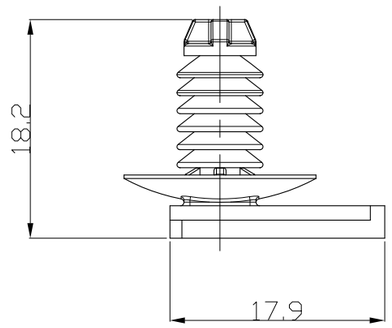

NOTE
1. GENERAL TOLERANCE: ±0.3, ±3°

1897256-2	PA66	BLACK
P/N	MATERIAL	COLOR

THIS DRAWING IS A CONTROLLED DOCUMENT FOR TYCO ELECTRONICS CORPORATION IT IS SUBJECT TO CHANGE AND THE CONTROLLING ENGINEERING ORGANIZATION SHOULD BE CONTACTED FOR THE LATEST REVISION.

DIMENSIONS: MM

TOLERANCES UNLESS OTHERWISE SPECIFIED:
0 PLC ±
1 PLC ±
2 PLC ±
3 PLC ±
4 PLC ±
ANGLES ±

MATERIAL: SEE TABLE

FINISH: – –

DWN SH LEE
CHK YJ YOUN
APVD JK SONG
PRODUCT SPEC –
APPLICATION SPEC –
WEIGHT –

Tyco Electronics
AMP KOREA.
Kyungsan, Korea

NAME: HEXAGON CLIP FOR J300

SIZE	CAGE CODE	DRAWING NO	RESTRICTED TO
A3	00779	C- 1897256	–

CUSTOMER DRAWING | SCALE 2:1 | SHEET 1 OF 1 | REV A

AMP 1470-19 REV 31MAR2000