| PART NUMBER | ENGINEERING NUMBER | FINISH LENGTH |
|---|---|---|
| 1300060217 | 103000A01F030 | 3.00′ +1.75″ -0 [.9M +44.5 -0] |
| 1300060221 | 103000A01F060 | 6.00′ +3.50″ -0 [1.8M +88.9 -0] |
| 1300060229 | 103000A01F090 | 9.00′ +3.50″ -0 [2.7M +88.9 -0] |
| 1300060232 | 103000A01F120 | 12.00′ +6.50″ -0 [3.7M +165.1 -0] |
| 1300060237 | 103000A01F150 | 15.00′ +6.50″ -0 [4.6M +165.1 -0] |
| 1300060241 | 103000A01F200 | 20.00′ +6.50″ -0 [6.1M +165.1 -0] |
| 1300060246 | 103000A01F250 | 25.00′ +12.50″ -0 [7.6M +317.5 -0] |
| 1300060250 | 103000A01F300 | 30.00′ +12.50″ -0 [9.1M +317.5 -0] |
| 1300060253 | 103000A01F350 | 35.00′ +12.50″ -0 [10.7M +317.5 -0] |
| 1300060254 | 103000A01F400 | 40.00′ +12.50″ -0 [12.2M +317.5 -0] |

| PART NUMBER | ENGINEERING NUMBER | FINISH LENGTH |
|---|---|---|
| 1300060257 | 103000A01F450 | 45.00′ +12.50″ -0 [13.7M +317.5 -0] |
| 1300060258 | 103000A01F500 | 50.00′ +24.50″ -0 [15.2M +622.3 -0] |

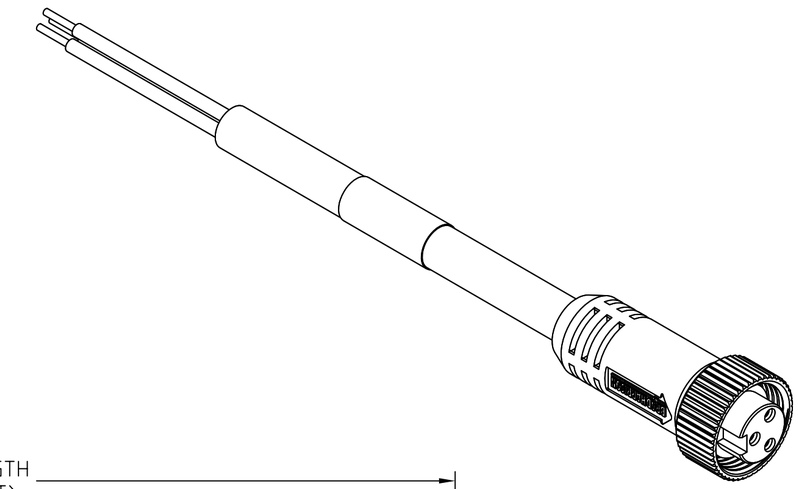

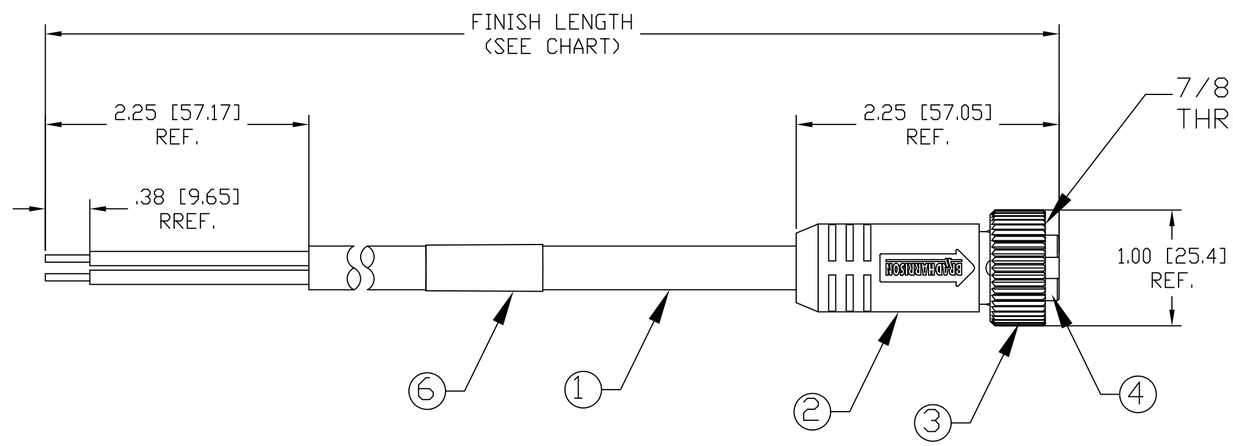


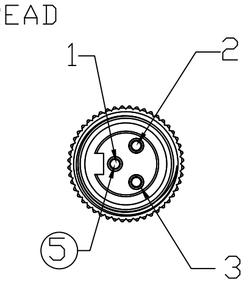


FEMALE
FACE VIEW

NOTE
1) MATERIAL: SEE TABLE
2) FINISHES: SEE TABLE
3) WRAP LABEL IS MARKED WITH P/N, DATE CODE, VOLTAGE & AMPERAGE
4) MATES WITH: MINI CHANGE, 3 POLE RECEPTACLE
5) ELECTRICAL DATA:
INLINE CORDSET
FEMALE A-SIZE WITH FLYING LEADS
16AWG UNSHIELDED
POLES: 3
MAX. VOLTAGE: 600V
MAX. CURRENT 13A
PROTECTION IP67
TEMPERATURE RANGE: -20°C TO 105°C
6) PACKAGING:
CABLE ASSEMBLIES ARE BAGGED SEPERATELY IN POLY BAGS WITH BAR CODE LABEL ATTACHED TO OUTSIDE OF BAG.
7)ASSEMBLY IS RoHS COMPLIANT.
8)CERTIFICATION
UL RECOGNIZED, FILE NO. E152210
CSA CERTIFIED, FILE NO. LR6837

P1

| | |
|---|---|
| 1 | GREEN/YELLOW-GRD |
| 2 | BLACK |
| 3 | WHITE |

WIRING DIAGRAM

| ITEM | QTY. | DESCRIPTION | MATERIAL | FINISH |
|---|---|---|---|---|
| 6 | 1 | LABEL | PLASTIC FILM | BLACK/YELLOW |
| 5 | 3 | CONTACT SOCKET | COPPER ALLOY | GOLD PLATED |
| 4 | 1 | INSERT | PVC | YELLOW |
| 3 | 1 | COUPLING NUT | ZINC DIE CAST | BLACKE-COATED |
| 2 | 1 | OVERMOLD | PVC | YELLOW |
| 1 | 1 | CABLE, 16AWG-3 TYPE STOOW | PVC | YELLOW |

CORRECT COLOR ROTATION
EC NO: WNA2010-0389
DRWN: TWOLDEGE 12/17/09
CH'KD: BWOODMAN —
APPR: JFMURPHY 2010/01/04
DESCRIPTION
REV B

QUALITY SYMBOL
▼=0
C=0

GENERAL TOLERANCES (UNLESS SPECIFIED)

| | mm | INCH |
|---|---|---|
| 4 PLACES | ±---- | ±--- |
| 3 PLACES | ±.005 | ±.005 |
| 2 PLACES | ±.013 | ±.010 |
| 1 PLACE | ±.025 | ±.020 |
| ANGULAR ±1/2° | | |

DRAFT WHERE APPLICABLE MUST REMAIN WITHIN DIMENSIONS

DIMENSION STYLE: IN/MM
SCALE: 1:1
DESIGN UNITS: INCH
THIRD ANGLE PROJECTION

DRAWN BY: TWOLDEGE DATE: 2009/07/10
CHECKED BY: BWOODMAN DATE: 2009/07/10
APPROVED BY: JFMURPHY DATE: 2010/01/04

TITLE
MINI CHANGE ASSEMBLY
3-POLE FEMALE ST
16/3AWG PVC

MOLEX INCORPORATED

MATERIAL NO.: SEE CHART
DOCUMENT NO.: SD-130006-008
SHEET NO.: 1 0F 1
SIZE: C

THIS DRAWING CONTAINS INFORMATION THAT IS PROPRIETARY TO MOLEX INCORPORATED AND SHOULD NOT BE USED WITHOUT WRITTEN PERMISSION