- -55 to +125°C Temp Range
- Industry Std. Footprint
- Pb Free/RoHS Compliant

CSM-7X-DU
SMD CRYSTAL

OPERATING CONDITIONS / ELECTRICAL CHARACTERISTICS

PARAMETERS	CONDITIONS	CSM-7X-DU			UNITS
		MIN	TYP	MAX	
Frequency Range		3.57		70.000	MHz
Frequency Tolerance	at +25°C			± 30	ppm
Frequency Stability	-55 to +125°C			± 100	ppm
Shunt Capacitance				7	pF
Load Capacitance	Specify in P/N	10	20	Series	pF
Drive Level				500	µW
Operating Temperature		-55		+125	°C
Storage Temperature		-55		+125	°C
Aging (Per Year)	@ +25°C ±3°C			±5	ppm

EQUIVALENT SERIES RESISTANCE/MODE OF OSCILLATION

FREQUENCY RANGE (MHz)	MODE OF OSC	MAX ESR Ω	FREQUENCY RANGE (MHz)	MODE OF OSC	MAX ESR Ω
3.57 ~ 4.999	Fundamental	150	13.000 ~ 19.999	Fundamental	40
5.000 ~ 5.999	Fundamental	100	20.000 ~ 30.000	Fundamental	30
6.000 ~ 6.999	Fundamental	80	26.000 ~ 39.999	3rd Overtone	100
7.000 ~ 8.999	Fundamental	60	40.000 ~ 70.000	3rd Overtone	80
9.000 ~ 12.999	Fundamental	50			

DIMENSIONS (mm)

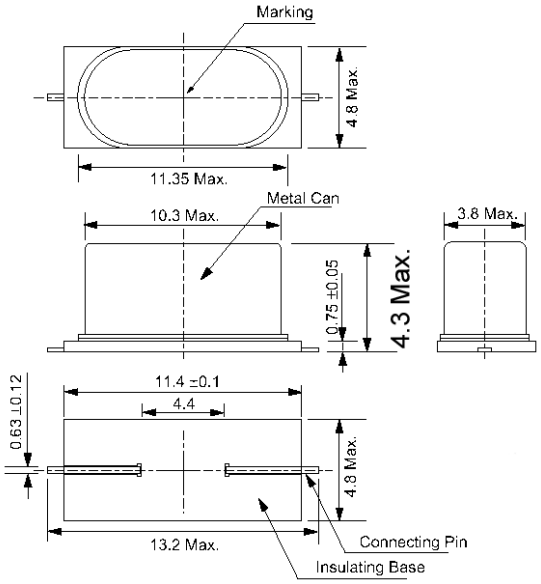

Figure 1) Top, Side, Bottom and End views

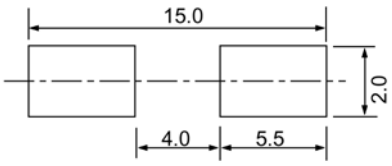

Figure 2) Suggested Land Pattern

PART NUMBERING GUIDE: Example ECS-200-20-5PXDU-TR

ECS - Frequency Abbreviation	- Load Capacitance	- Package	Stability	Temperature	- Packaging
200 = 20.000 MHz See P/N Guide	20 =20 pF S=Series	5PX = CSM-7X	D= ± 100 ppm	U= -55 ~ +125°C	TR= Tape & Reel 1K/Reel

1105 South Ridgeview Road • Olathe, KS 66062 • Phone: 913.782.7787 • Fax: 913.782.6991 • www.ecsxtal.com