DRAWING MADE IN THIRD ANGLE PROJECTION

© COPYRIGHT 1974 AMP INCORPORATED, HARRISBURG, PA.
ALL INTERNATIONAL RIGHTS RESERVED. AMP INCORPORATED PRODUCTS COVERED BY FOREIGN PATENTS AND/OR PATENTS PENDING.
UNPUBLISHED COPYRIGHT. THIS DOCUMENT MAY NOT BE REPRODUCED OR DISCLOSED WITHOUT WRITTEN PERMISSION OF AMP INCORPORATED.

LOC	DIST
DF	DO

REVISIONS

P	F	ZONE	LTR	DESCRIPTION	DATE	APPROVED
			0	RELEASED	10/22/74	LM
			A	ADDED -4 PER ECN F-261	11/2/77	JCH
			B	ADDED -5 PER ECN F-319	11/29/77	AH
			C	ADDED -6 PER ECN F-506	4/6/79	AH
			D	ADDED -7 ECN H-904	6/30/81	AH
			E	REVISED PER ECN H-921	8/21/81	DRAW
			F	REV. PER ECN R-992	2-21-85	MPR
			G	SUPSD -1 & -2 R-2670 CT	6-88	
			H	REV 0600-0406-93 TT	7-93	HW
			J	REV PER 0600-6676-97 JY	7-98	CT

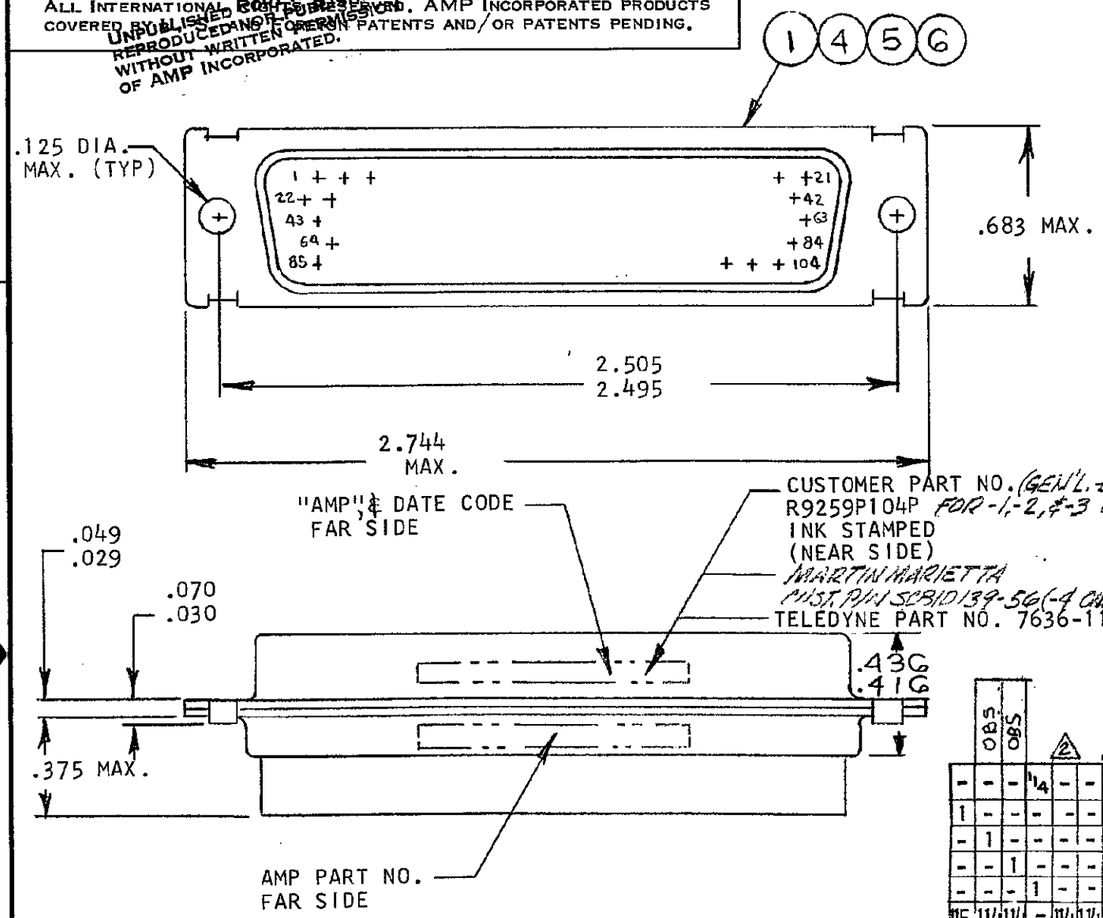

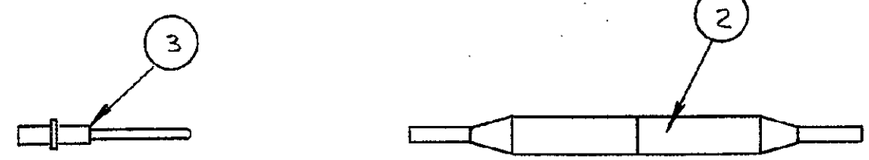

1 SUPSD BY 206066-2 & 91067-1
2 SUPSD BY 206832-2 & 91067-1

206832	206832	206832	206832	206832	206832	206832	DWG. SIZE	NUMBER	NAME	ITEM NO.
-	-	-	1/4	-	-	-	B	204370-8	CONTACT, PIN SIZE 22D	8
1	-	-	-	-	-	-	C	206066-8	PLUG ASSEMBLY, SIZE 6 TELEDYNE 7636-11	7
-	1	-	-	-	-	-	C	206066-7	PLUG ASSEMBLY, SIZE 6 R4383P104P	6
-	-	1	-	-	-	-	C	206066-6	PLUG ASSEMBLY, SIZE 6 R4383P104P	5
-	-	-	1	-	-	-	C	206066-5	PLUG ASSEMBLY, SIZE 6	4
115	114	114	-	114	114	-	B	204370-8	CONTACT, PIN - SIZE 22D	3
-	-	-	-	1	-	1	B	91067-1	INSERTION / EXTRACTION TOOL	2
-	-	-	-	1	1	1	C	206066-1	PLUG ASSEMBLY, SIZE 6 R9259P104P	1
-7	-6	-5	-4	-3	-2	-1				

~~PART NO~~

UNLESS OTHERWISE SPECIFIED DIMENSIONS ARE IN INCHES. TOLERANCES ON: DECIMALS ± .005, ANGLES ± —

MATERIAL —

FINISH —

CONTRACT NO

DR L. Mannington 10/22/74

CHK [illegible] 10/25/74

APPD R. J. Baer 10-28-74

APPD [illegible] 10-28-74

DSGN APPD

OTHER APPD

AMP INCORPORATED Harrisburg, Pa.

NAME KIT, "HDD" SERIES PLUG, SIZE #6 (104 POS.)

SIZE	CODE IDENT NO	DRAWING NO
B	00779	206832

SCALE — SHEET 1 OF 1

AMP 1470-15 (7-73)

CUSTOMER DRAWING