THIS DRAWING IS UNPUBLISHED. RELEASED FOR PUBLICATION -,- .
© COPYRIGHT - By - ALL RIGHTS RESERVED.

LOC	DIST
AF	50

REVISIONS

P	LTR	DESCRIPTION	DATE	DWN	APVD
	E	REVISED PER ECR-12-013459	27NOV2012	KH	PD

1 CONTINUOUS STRIP ON REELS.

2 FEED TO BE .535±.005

3 62345-2 IS REVERSE REELED.

4 OBSOLETE PARTS: OBSOLETE CIS TREAMLINING PER D.RENAUD/D.SINISI

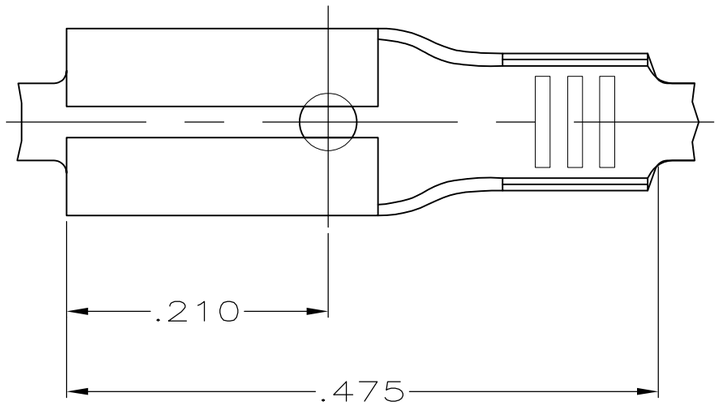

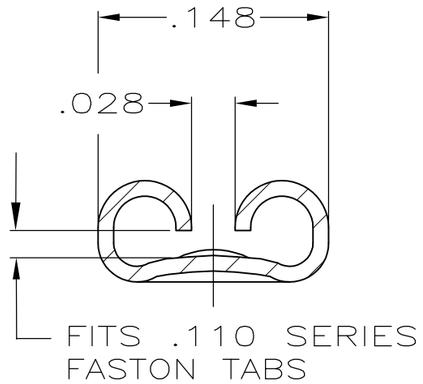

SECTION A-A
SCALE 10:1

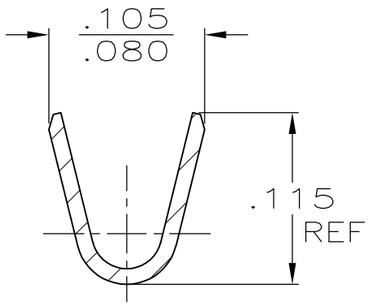

SECTION B-B
SCALE 10:1

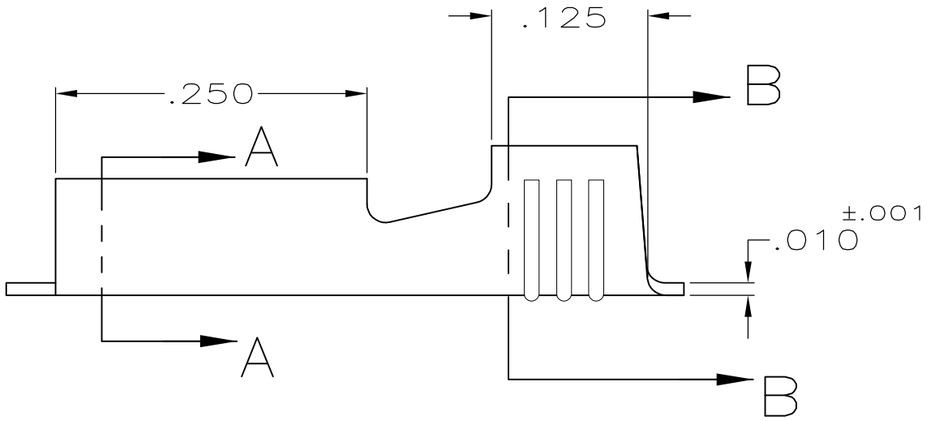

	WIRE SIZE	MATING TAB THK ±.001	PART NO.
	#20-#18 or (2)#20's	.025	3 62345-2
4 OBSOLETE	#20-#18 or (2)#20's	.025	~~62345-1~~

THIS DRAWING IS A CONTROLLED DOCUMENT.

DIMENSIONS: INCHES

TOLERANCES UNLESS OTHERWISE SPECIFIED:

0 PLC	± -
1 PLC	± -
2 PLC	± -
3 PLC	± .015
4 PLC	± -
ANGLES	± -

MATERIAL: BRASS

FINISH: PRE-TIN

DWN	JR RUTH	3/28/91
CHK	MS FEHER	3/28/91
APVD	C MEYERS	3/28/91
PRODUCT SPEC	—	
APPLICATION SPEC	—	
WEIGHT	—	

CUSTOMER DRAWING

TE Connectivity

NAME: RECEPTACLE, FASTON™ .110 SERIES

SIZE	CAGE CODE	DRAWING NO	RESTRICTED TO
A3	00779	C-62345	—

SCALE	SHEET	REV
8:1	1 OF 1	E