Feb.1.2018 Copyright 2018 HIROSE ELECTRIC CO., LTD. All Rights Reserved.

	COUNT	DESCRIPTION OF REVISIONS	BY	CHKD	DATE		COUNT	DESCRIPTION OF REVISIONS	BY	CHKD	DATE
△					. .	△					. .
△					. .	△					. .
△					. .	△					. .

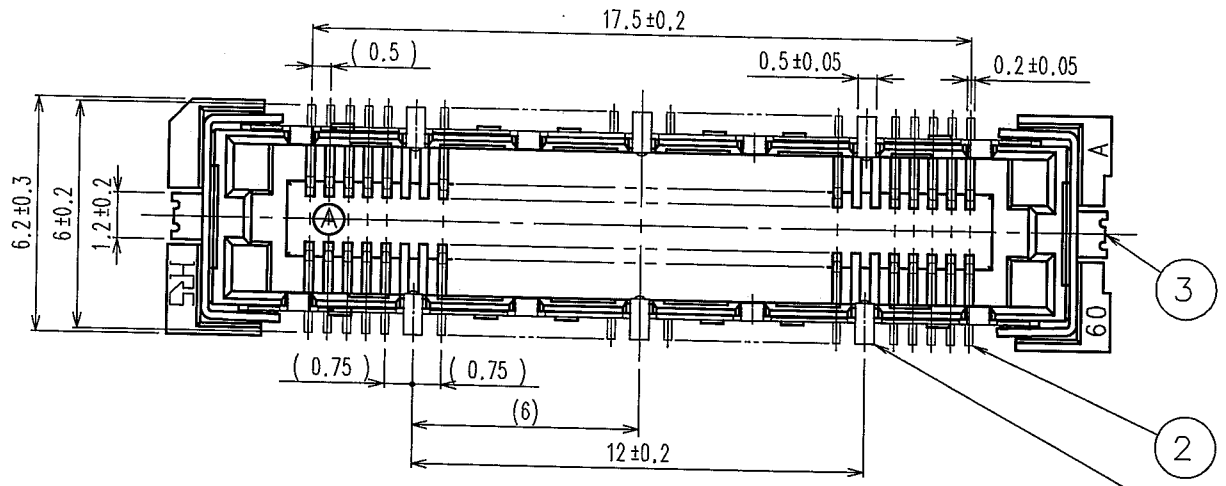

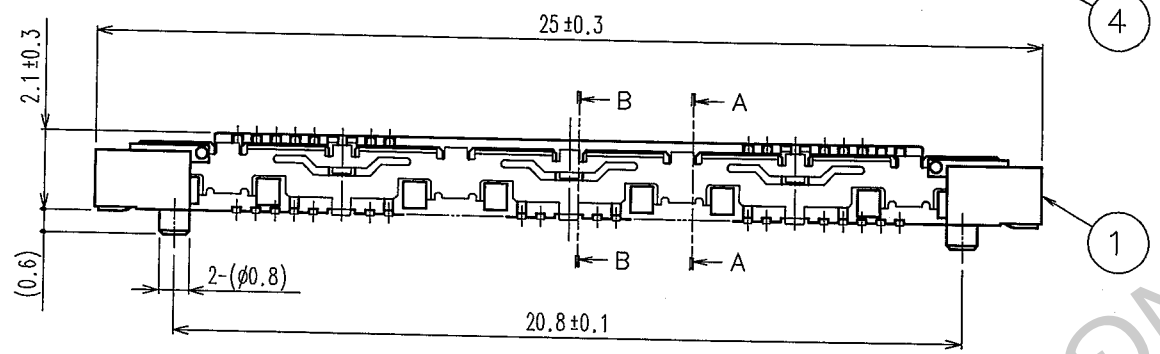

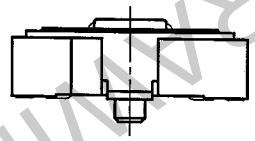

A-A(10:1)

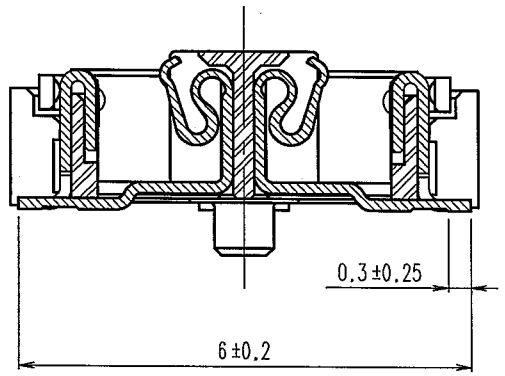

B-B(10:1)

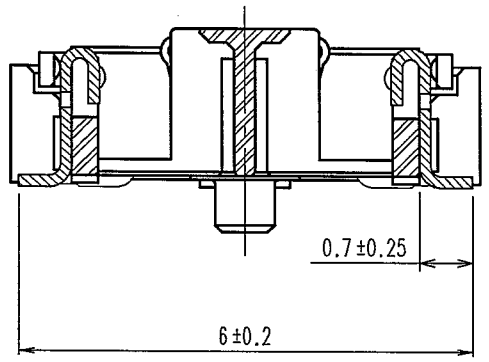

RECOMMENDED LAND PATTERN DIMENSION OF PCB

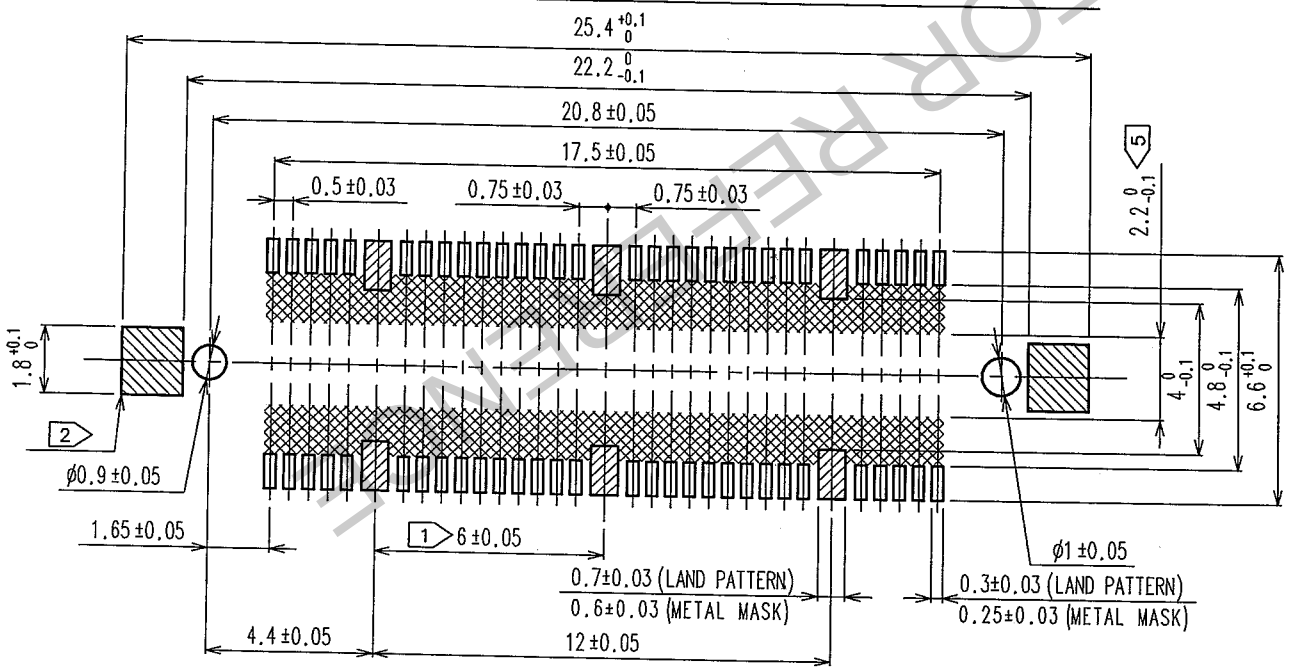

NOTES
1. 6 HATCHED ▨ PARTS:GROUND CIRUIT.
2. 2 HATCHED ▧ PARTS:GROUND CIRUIT.
3. SMT LEAD-COPLANARITY:0.1 MAX.
4. THIS PRODUCT HAS NO POLARITY TO PATTERN FOR MOUNTING.
5. MAKE SURE WIDTH OF PATTERN IS WITHIN THAT OF LAND ,OR LEAD MAY TOUCH PATTERN.(THIS APPLIES TO HATCHED ▩ AREA.)
6. DIMENSION IN PARENTHESES ARE FOR REFERENCE.

TO

NO.	MATERIAL	FINISH, REMARKS	NO.	MATERIAL	FINISH, REMARKS
3,4	PHOSPHOR BRONZE	TIN PLATING	2	PHOSPHOR BRONZE	CONTACT AREA : GOLD 0.1μm min.
1	LCP	BEIGE UL94V-0			MOUNTING AREA : GOLD FLASH
					UNDER PLATING : NICKEL 1.0μm min.

CODE NO.(OLD)	DRAWN	DESIGNED	CHECKED	APPROVED	RELEASED
CL	T.YANAGISAWA '05.10.12	T.Noda '05.10.13	H.Ogawa '05.10.13	H.Ogawa '05.10.13	

SCALE	DRAWING NO.	PART NO.
5 : 1	EDC3-152632-25	FX11A-60S/6-SV(71)
UNITS mm	HRS HIROSE ELECTRIC CO.,LTD.	CODE NO. CL573-0702-9-71 1/1

FORM NO.229

HRS DRAWING FOR REFERENCE ONLY